Civil Aviation Authority

Air Navigation: The Order and the Regulations

Published for the use of those concerned with air navigation, but not to be treated as authoritative (see Foreword)

CAP 393

INTENTIONALLY LEFT BLANK

Civil Aviation Authority

CAP 393

Air Navigation: The Order and the Regulations

Published for the use of those concerned with air navigation, but not to be treated as authoritative (see Foreword)

May 2014

© Civil Aviation Authority 2014

All rights reserved. Copies of this publication may be reproduced for personal use, or for use within a company or organisation, but may not otherwise be reproduced for publication.

To use or reference CAA publications for any other purpose, for example within training material for students, please contact the CAA at the address below for formal agreement.

ISBN 978 0 11792 866 4

First edition 1976
Second edition 1982
Third edition 22 April 2003
Reprinted 1 September 2009, incorporating amendments to 1/2009
Reprinted 11 January 2010, incorporating amendments to 2/2009
Reprinted 14 April 2010, incorporating amendments to 1/2010
Reprinted 10 August 2012, incorporating amendments to 1/2012
Reprinted 7 February 2014, incorporating amendments to 1/2014
Reprinted 12 May 2014, incorporating amendments to 2/2014

Enquiries regarding the content of this publication should be addressed to:
Office of the General Counsel, Civil Aviation Authority, CAA House, 45-59 Kingsway, London WC2B 6TE.

The latest version of this document is available in electronic format at www.caa.co.uk, where you may also register for e-mail notification of amendments.

Published by TSO (The Stationery Office) on behalf of the UK Civil Aviation Authority.

Printed copy available from:
TSO, PO Box 29, Norwich NR3 1GN
Telephone orders/General enquiries: 0844 477 7300
Fax orders: 0870 600 5533
www.tsoshop.co.uk
E-mail: caa@tso.co.uk
Textphone: 0870 240 3701

Amendment Record

Amendment Number	Amendment Date	Incorporated by	Incorporated on

Amendment Number	Amendment Date	Incorporated by	Incorporated on

List of Effective Pages

Section	Part	Page	Date
		iii	12 May 2014
		iv	12 May 2014
		v	12 May 2014
		vi	10 August 2012
		vii	12 May 2014
Contents		1	11 January 2010
Foreword		1	10 October 2006
Section 1		1	10 August 2012
Section 1		2	10 August 2012
Section 1		3	10 August 2012
Section 1		4	10 August 2012
Section 1		5	10 August 2012
Section 1		6	10 August 2012
Section 1		7	10 August 2012
Section 1		8	10 August 2012
Section 1		9	10 August 2012
Section 1		10	14 April 2010
Section 1		11	14 April 2010
Section 1	Part 1	1	10 August 2012
Section 1	Part 1	2	14 April 2010
Section 1	Part 1	3	14 April 2010
Section 1	Part 1	4	14 April 2010
Section 1	Part 1	5	14 April 2010
Section 1	Part 2	1	14 April 2010
Section 1	Part 2	2	14 April 2010
Section 1	Part 3	1	14 April 2010
Section 1	Part 3	2	10 August 2012
Section 1	Part 3	3	10 August 2012
Section 1	Part 3	4	10 August 2012
Section 1	Part 3	5	10 August 2012
Section 1	Part 3	6	10 August 2012
Section 1	Part 3	7	10 August 2012
Section 1	Part 3	8	10 August 2012
Section 1	Part 3	9	10 August 2012
Section 1	Part 3	10	10 August 2012
Section 1	Part 3	11	10 August 2012
Section 1	Part 3	12	10 August 2012
Section 1	Part 3	13	10 August 2012
Section 1	Part 3A	1	10 August 2012
Section 1	Part 3A	2	10 August 2012
Section 1	Part 3A	3	10 August 2012
Section 1	Part 3A	4	10 August 2012
Section 1	Part 3A	5	10 August 2012
Section 1	Part 3A	6	10 August 2012
Section 1	Part 4	1	14 April 2010
Section 1	Part 4	2	10 August 2012
Section 1	Part 4	3	14 April 2010
Section 1	Part 4	4	14 April 2010
Section 1	Part 5	1	14 April 2010
Section 1	Part 5	2	14 April 2010
Section 1	Part 5	3	14 April 2010
Section 1	Part 6	1	10 August 2012
Section 1	Part 6	2	7 February 2014
Section 1	Part 6	3	7 February 2014
Section 1	Part 6	4	7 February 2014
Section 1	Part 6	5	7 February 2014
Section 1	Part 6	6	7 February 2014
Section 1	Part 6	7	7 February 2014
Section 1	Part 7	1	10 August 2012
Section 1	Part 7	2	10 August 2012
Section 1	Part 7	3	10 August 2012
Section 1	Part 7	4	10 August 2012
Section 1	Part 7	5	10 August 2012
Section 1	Part 7	6	10 August 2012
Section 1	Part 7	7	10 August 2012
Section 1	Part 8	1	10 August 2012
Section 1	Part 8	2	7 February 2014
Section 1	Part 8	3	10 August 2012
Section 1	Part 9	1	14 April 2010
Section 1	Part 9	2	14 April 2010
Section 1	Part 9	3	14 April 2010
Section 1	Part 10	1	14 April 2010
Section 1	Part 10	2	14 April 2010
Section 1	Part 10	3	14 April 2010
Section 1	Part 10	4	14 April 2010
Section 1	Part 10	5	14 April 2010
Section 1	Part 11	1	14 April 2010
Section 1	Part 11	2	14 April 2010
Section 1	Part 12	1	14 April 2010
Section 1	Part 12	2	14 April 2010
Section 1	Part 13	1	14 April 2010
Section 1	Part 13	2	14 April 2010
Section 1	Part 13	3	14 April 2010
Section 1	Part 13	4	10 August 2012
Section 1	Part 13	5	14 April 2010
Section 1	Part 13	6	14 April 2010
Section 1	Part 13	7	14 April 2010
Section 1	Part 14	1	14 April 2010
Section 1	Part 14	2	14 April 2010
Section 1	Part 15	1	14 April 2010
Section 1	Part 15	2	14 April 2010
Section 1	Part 15	3	14 April 2010

Section	Part	Page	Date
Section 1	Part 15	4	14 April 2010
Section 1	Part 15	5	14 April 2010
Section 1	Part 16	1	14 April 2010
Section 1	Part 16	2	14 April 2010
Section 1	Part 17	1	14 April 2010
Section 1	Part 17	2	14 April 2010
Section 1	Part 17	3	14 April 2010
Section 1	Part 17	4	14 April 2010
Section 1	Part 18	1	14 April 2010
Section 1	Part 18	2	14 April 2010
Section 1	Part 19	1	14 April 2010
Section 1	Part 20	1	14 April 2010
Section 1	Part 20	2	14 April 2010
Section 1	Part 20	3	14 April 2010
Section 1	Part 21	1	14 April 2010
Section 1	Part 21	2	14 April 2010
Section 1	Part 21	3	10 August 2012
Section 1	Part 21	4	10 August 2012
Section 1	Part 22	1	14 April 2010
Section 1	Part 22	2	14 April 2010
Section 1	Part 22	3	14 April 2010
Section 1	Part 22	4	14 April 2010
Section 1	Part 22	5	14 April 2010
Section 1	Part 22	6	14 April 2010
Section 1	Part 22	7	14 April 2010
Section 1	Part 23	1	10 August 2012
Section 1	Part 23	2	10 August 2012
Section 1	Part 23	3	10 August 2012
Section 1	Part 24	1	10 August 2012
Section 1	Part 24	2	10 August 2012
Section 1	Part 24	3	10 August 2012
Section 1	Part 25	1	14 April 2010
Section 1	Part 25	2	10 August 2012
Section 1	Part 25A	1	10 August 2012
Section 1	Part 25A	2	10 August 2012
Section 1	Part 26	1	14 April 2010
Section 1	Part 26	2	14 April 2010
Section 1	Part 26	3	14 April 2010
Section 1	Part 27	1	14 April 2010
Section 1	Part 27	2	14 April 2010
Section 1	Part 27	3	14 April 2010
Section 1	Part 27	4	14 April 2010
Section 1	Part 27	5	14 April 2010
Section 1	Part 27	6	14 April 2010
Section 1	Part 28	1	14 April 2010
Section 1	Part 28	2	14 April 2010
Section 1	Part 28	3	14 April 2010
Section 1	Part 29	1	12 May 2014
Section 1	Part 29	2	12 May 2014
Section 1	Part 30	1	14 April 2010
Section 1	Part 30	2	14 April 2010
Section 1	Part 30	3	14 April 2010
Section 1	Part 31	1	12 May 2014
Section 1	Part 31	2	12 May 2014
Section 1	Part 31	3	12 May 2014
Section 1	Part 31	4	14 April 2010
Section 1	Part 31	5	14 April 2010
Section 1	Part 31	6	10 August 2012
Section 1	Part 31	7	10 August 2012
Section 1	Part 31	8	7 February 2014
Section 1	Part 31	9	7 February 2014
Section 1	Part 32	1	14 April 2010
Section 1	Part 32	2	14 April 2010
Section 1	Part 32	3	14 April 2010
Section 1	Part 33	1	14 April 2010
Section 1	Part 33	2	10 August 2012
Section 1	Part 33	3	14 April 2010
Section 1	Part 33	4	14 April 2010
Section 1	Part 33	5	10 August 2012
Section 1	Part 33	6	7 February 2014
Section 1	Part 33	7	7 February 2014
Section 1	Part 33	8	7 February 2014
Section 1	Part 33	9	7 February 2014
Section 1	Part 33	10	7 February 2014
Section 1	Part 33	11	7 February 2014
Section 1	Part 33	12	7 February 2014
Section 1	Part 33	13	7 February 2014
Section 1	Part 33	14	7 February 2014
Section 1	Part 33	15	7 February 2014
Section 1	Part 33	16	7 February 2014
Section 1	Part 33	17	7 February 2014
Section 1	Part 33	18	7 February 2014
Section 1	Part 33	19	7 February 2014
Section 1	Part 33	20	10 August 2012
Section 1	Part 33	21	10 August 2012
Section 1	Part 34	1	10 August 2012
Section 1	Part 34	2	14 April 2010
Section 1	Part 34	3	14 April 2010
Section 1	Part 34	4	14 April 2010
Section 1	Schedule 1	1	14 April 2010
Section 1	Schedule 2	1	14 April 2010
Section 1	Schedule 2	2	14 April 2010
Section 1	Schedule 2	3	14 April 2010
Section 1	Schedule 3	1	14 April 2010
Section 1	Schedule 3	2	14 April 2010
Section 1	Schedule 3	3	14 April 2010

Section	Part	Page	Date
Section 1	Schedule 3	4	14 April 2010
Section 1	Schedule 4	1	14 April 2010
Section 1	Schedule 4	2	14 April 2010
Section 1	Schedule 4	3	14 April 2010
Section 1	Schedule 4	4	14 April 2010
Section 1	Schedule 4	5	14 April 2010
Section 1	Schedule 4	6	14 April 2010
Section 1	Schedule 4	7	14 April 2010
Section 1	Schedule 4	8	14 April 2010
Section 1	Schedule 4	9	14 April 2010
Section 1	Schedule 4	10	14 April 2010
Section 1	Schedule 4	11	14 April 2010
Section 1	Schedule 4	12	14 April 2010
Section 1	Schedule 4	13	14 April 2010
Section 1	Schedule 4	14	14 April 2010
Section 1	Schedule 4	15	14 April 2010
Section 1	Schedule 4	16	14 April 2010
Section 1	Schedule 4	17	14 April 2010
Section 1	Schedule 4	18	14 April 2010
Section 1	Schedule 4	19	14 April 2010
Section 1	Schedule 4	20	14 April 2010
Section 1	Schedule 4	21	14 April 2010
Section 1	Schedule 4	22	14 April 2010
Section 1	Schedule 4	23	14 April 2010
Section 1	Schedule 4	24	14 April 2010
Section 1	Schedule 4	25	14 April 2010
Section 1	Schedule 4	26	14 April 2010
Section 1	Schedule 4	27	14 April 2010
Section 1	Schedule 4	28	14 April 2010
Section 1	Schedule 4	29	14 April 2010
Section 1	Schedule 4	30	14 April 2010
Section 1	Schedule 4	31	14 April 2010
Section 1	Schedule 4	32	14 April 2010
Section 1	Schedule 4	33	14 April 2010
Section 1	Schedule 4	34	14 April 2010
Section 1	Schedule 5	1	14 April 2010 corr.
Section 1	Schedule 5	2	14 April 2010
Section 1	Schedule 5	3	14 April 2010
Section 1	Schedule 5	4	14 April 2010
Section 1	Schedule 5	5	14 April 2010
Section 1	Schedule 6	1	14 April 2010
Section 1	Schedule 6	2	14 April 2010
Section 1	Schedule 7	1	10 August 2012
Section 1	Schedule 7	2	10 August 2012
Section 1	Schedule 7	3	10 August 2012
Section 1	Schedule 7	4	10 August 2012
Section 1	Schedule 7	5	10 August 2012
Section 1	Schedule 7	6	10 August 2012
Section 1	Schedule 7	7	10 August 2012
Section 1	Schedule 7	8	10 August 2012
Section 1	Schedule 7	9	10 August 2012
Section 1	Schedule 7	10	10 August 2012
Section 1	Schedule 7	11	10 August 2012
Section 1	Schedule 7	12	10 August 2012
Section 1	Schedule 7	13	10 August 2012
Section 1	Schedule 7	14	10 August 2012
Section 1	Schedule 7	15	10 August 2012
Section 1	Schedule 7	16	10 August 2012
Section 1	Schedule 7	17	10 August 2012
Section 1	Schedule 7	18	10 August 2012
Section 1	Schedule 7	19	10 August 2012
Section 1	Schedule 7	20	10 August 2012
Section 1	Schedule 7	21	10 August 2012
Section 1	Schedule 7	22	10 August 2012
Section 1	Schedule 7	23	10 August 2012
Section 1	Schedule 7	24	10 August 2012
Section 1	Schedule 7	25	10 August 2012
Section 1	Schedule 7	26	10 August 2012
Section 1	Schedule 7	27	10 August 2012
Section 1	Schedule 8	1	14 April 2010
Section 1	Schedule 8	2	14 April 2010
Section 1	Schedule 8	3	14 April 2010
Section 1	Schedule 8	4	14 April 2010
Section 1	Schedule 8	5	14 April 2010
Section 1	Schedule 8	6	14 April 2010
Section 1	Schedule 8	7	14 April 2010
Section 1	Schedule 8	8	14 April 2010
Section 1	Schedule 9	1	14 April 2010
Section 1	Schedule 9	2	14 April 2010
Section 1	Schedule 10	1	10 August 2012
Section 1	Schedule 11	1	14 April 2010
Section 1	Schedule 12	1	14 April 2010 corr.
Section 1	Schedule 12	2	14 April 2010
Section 1	Schedule 13	1	10 August 2012
Section 1	Schedule 13	2	10 August 2012
Section 1	Schedule 13	3	14 April 2010
Section 1	Schedule 13	4	10 August 2012
Section 1	Schedule 13	5	10 August 2012
Section 1	Schedule 13	6	10 August 2012
Section 1	Schedule 13	7	10 August 2012
Section 1	Schedule 13	8	10 August 2012
Section 1	Schedule 13	9	10 August 2012
Section 1	Schedule 13	10	7 February 2014
Section 1	Schedule 13	11	12 May 2014
Section 1	Schedule 13	12	12 May 2014
Section 1	Schedule 14	1	14 April 2010

Section	Part	Page	Date
Table of Comparison		1	14 April 2010
Table of Comparison		2	14 April 2010
Table of Comparison		3	14 April 2010
Table of Comparison		4	14 April 2010
Section 2		1	11 January 2010
Section 2		2	11 January 2010
Section 2		3	11 January 2010
Section 2		4	11 January 2010
Section 2		5	11 January 2010
Section 2		6	11 January 2010
Section 2		7	14 April 2010
Section 2		8	14 April 2010
Section 2		9	11 January 2010
Section 2		10	11 January 2010
Section 2		11	11 January 2010
Section 2		12	11 January 2010
Section 2		13	11 January 2010
Section 2		14	11 January 2010
Section 2		15	11 January 2010
Section 2		16	11 January 2010
Section 2		17	11 January 2010
Section 2		18	11 January 2010
Section 2		19	11 January 2010 corr.
Section 2		20	11 January 2010
Section 2		21	11 January 2010
Section 2		22	11 January 2010
Section 2		23	11 January 2010 corr.
Section 2		24	11 January 2010
Section 2		25	11 January 2010
Section 2		26	11 January 2010
Section 2		27	11 January 2010
Section 2		28	11 January 2010
Section 2		29	11 January 2010
Section 2		30	11 January 2010
Section 2		31	11 January 2010
Section 2		32	11 January 2010
Section 2		33	11 January 2010 corr.
Section 2		34	11 January 2010
Section 2		35	11 January 2010
Section 2		36	11 January 2010
Section 2		37	11 January 2010
Section 2		38	11 January 2010
Section 2		39	11 January 2010
Section 2		40	11 January 2010
Section 2		41	11 January 2010
Section 2		42	11 January 2010
Section 2		43	11 January 2010 corr.
Section 2		44	11 January 2010 corr.
Section 2		45	11 January 2010 corr.
Section 2		46	11 January 2010 corr.
Section 2		47	11 January 2010 corr.
Section 2		48	11 January 2010 corr.
Section 2		49	11 January 2010 corr.
Section 2		50	11 January 2010 corr.
Section 2		51	11 January 2010 corr.
Section 2		52	11 January 2010 corr.
Section 2		53	11 January 2010
Section 3		1	30 March 2007
Section 3		2	12 April 2006
Section 3		3	12 April 2006
Section 3		4	12 April 2006
Section 3		5	12 April 2006
Section 3		6	12 April 2006
Section 3		7	12 April 2006
Section 3		8	12 April 2006
Section 3		9	12 April 2006
Section 3		10	12 April 2006
Section 3		11	12 April 2006
Section 3		12	12 April 2006
Section 3		13	12 April 2006
Section 3		14	12 April 2006
Section 3		15	12 April 2006
Section 3		16	12 April 2006
Section 3		17	12 April 2006
Section 3		18	12 April 2006
Section 3		19	12 April 2006
Section 3		20	12 April 2006
Section 3		21	12 April 2006
Section 3		22	12 April 2006
Section 3		23	12 April 2006
Section 3		24	12 April 2006
Section 3		25	12 April 2006
Section 3		26	12 April 2006
Section 3		27	12 April 2006
Section 3		28	12 April 2006
Section 3		29	12 April 2006
Section 3		30	12 April 2006
Section 3		31	12 April 2006
Section 3		32	12 April 2006
Section 4		1	22 April 2003
Section 4		2	22 April 2003
Section 5		1	2 June 2008
Section 5		2	2 June 2008
Section 5		3	22 April 2003
Section 5		4	28 August 2007
Section 5		5	28 August 2007

Section	Part	Page	Date
Section 5		6	11 January 2010
Section 5		7	28 August 2007
Section 5		8	28 August 2007
Section 5		9	28 August 2007
Section 5		10	28 August 2007
Section 5		11	28 August 2007
Section 5		12	28 August 2007
Section 5		13	28 August 2007
Section 5		14	10 August 2012
Section 6		1	22 April 2003
Section 6		2	22 April 2003
Section 6		3	11 January 2010
Section 6		4	11 January 2010
Section 6		5	22 April 2003
Section 6		6	22 April 2003
Section 6		7	22 April 2003
Section 6		8	22 April 2003
Section 6		9	22 April 2003
Section 6		10	22 April 2003
Section 6		11	22 April 2003
Section 6		12	22 April 2003
Section 6		13	22 April 2003
Section 6		14	22 April 2003
Section 6		15	22 April 2003
Section 6		16	22 April 2003
Section 6		17	11 January 2010
Section 6		18	22 April 2003
Section 6		19	22 April 2003
Section 6		20	22 April 2003
Section 6		21	22 April 2003
Section 6		22	22 April 2003
Section 6		23	11 January 2010
Section 6		24	11 January 2010
Section 6		25	22 April 2003
Section 6		26	22 April 2003
Section 6		27	22 April 2003
Section 6		28	22 April 2003
Section 6		29	22 April 2003
Section 6		30	22 April 2003
Section 6		31	22 April 2003
Section 6		32	22 April 2003
Section 6		33	22 April 2003
Section 7		1	22 April 2003
Section 7		2	22 April 2003
Section 7		3	22 April 2003
Section 7		4	7 February 2014
Section 7		5	22 April 2003
Section 7		6	22 April 2003
Section 7		7	22 April 2003
Section 7		8	22 April 2003
Section 7		9	22 April 2003
Section 7		10	22 April 2003
Section 7		11	22 April 2003
Section 7		12	22 April 2003
Section 7		13	22 April 2003
Section 7		14	22 April 2003
Section 7		15	22 April 2003
Section 7		16	22 April 2003
Section 7		17	22 April 2003
Section 7		18	22 April 2003

INTENTIONALLY LEFT BLANK

GENERAL CONTENTS **JANUARY 2010**

Check List of Pages

Foreword

1 The Air Navigation Order 2009 (SI 2009 No. 3015)*

2 The Rules of the Air Regulations 2007 (SI 2007 No.734)*

3 The Air Navigation (General) Regulations 2006 (SI 2006 No. 601)*

4 The Air Navigation (Cosmic Radiation)(Keeping of Records) Regulations 2000 (SI 2000 No.1380)*

5 Permanent Air Navigation (Restriction of Flying) Regulations*

6 The Civil Aviation Authority Regulations 1991 (SI 1991 No.1672)*

7 The Air Navigation (Dangerous Goods) Regulations 2009 (SI 2009 No.1492)*

*Crown copyright material is reproduced with the permission of the Controller of HMSO and the Queen's Printer for Scotland.

INTENTIONALLY LEFT BLANK

FOREWORD APRIL 2003

1 Status

1.1 This work sets out the provisions of the Air Navigation Order as amended together with Regulations made under the Order. These Regulations are The Rules of the Air Regulations, The Air Navigation (General) Regulations, the Air Navigation (Cosmic Radiation) (Keeping of Records) Regulations, the Air Navigation (Dangerous Goods) Regulations and a number of permanent Air Navigation (Restriction of Flying) Regulations. It also contains the provisions of the Civil Aviation Authority Regulations. As with the Air Navigation Order itself, the Regulations are in their currently amended form.

1.2 It has been prepared for those concerned with day to day matters relating to Air Navigation who require an up to date version of the Orders and the Regulations mentioned above. It is edited by the Legal Adviser's Department of the Civil Aviation Authority. Courts of Law will however refer only to the Queen's Printer's Edition of Statutory Instruments.

2 Updating

2.1 The work will be kept up to date on the CAA website.

2.2 Anyone may register on the CAA website to obtain e-mail notification of any amendments.

2.3 Anyone wishing to purchase a printed copy of CAP 393 and to subscribe to an amendment service for their printed copy should contact the CAA's licensed supplier. Contact details for the licensed supplier may be found on the CAA website.

3 Amendments to the text

3.1 Where only part of the text has been amended, footnotes will give references to the provision by which the amendments were made.

4 Enquiries

4.1 Any comments or other communication relating to the contents of CAP 393 should be addressed to the Editor at CAA House, 45-59 Kingsway, London WC2B 6TE or by e-mail to legal@caa.co.uk.

4.2 Questions concerning publication and distribution of the printed version and its amendment service should be addressed to the CAA's licensed supplier at the address shown on the CAA website.

INTENTIONALLY LEFT BLANK

SECTION 1 THE AIR NAVIGATION ORDER 2009

Coming into force in accordance with article 1

CONTENTS

Article

1 Citation and Commencement
2 Revocation

PART 1 REGISTRATION AND MARKING OF AIRCRAFT

3 Aircraft to be registered
4 CAA to register aircraft in the United Kingdom
5 Who may register aircraft in the United Kingdom
6 Application for registration
7 Changes to the register
8 Aircraft which are entered in the Register of Aircraft Mortgages
9 General provisions concerning registration
10 Nationality and registration marks

PART 2 AIR OPERATORS' CERTIFICATES AND OPERATIONAL DIRECTIVES

11 Requirement for an EU-OPS air operator certificate
12 Requirement for and grant of national air operator's certificate
13 Requirement for and grant of police air operator's certificate
14 Offering commercial transport and public transport flights
15 Operational directives

PART 3 AIRWORTHINESS OF AIRCRAFT

16 Certificate of airworthiness to be in force
17 Certificate of airworthiness for State aircraft registered in the United Kingdom
18 Issue and renewal of national certificates of airworthiness
19 National certificate of airworthiness ceasing to be in force and issue of airworthiness directives for non-EASA aircraft
20 Issue of airworthiness directives for EASA aircraft
21 Issue of national permits to fly
22 National permits to fly ceasing to be in force and issue of airworthiness directives for permit aircraft
23 Limitations of national permits to fly
24 Issue and validity of certificates of validation of permits to fly or equivalent documents
25 Requirement for an approved maintenance schedule and a certificate of maintenance review for non-EASA aircraft
26 Issue of a certificate of maintenance review for non-EASA aircraft
27 Technical Log for non-EASA aircraft
28 Requirement for a certificate of release to service for non-EASA aircraft
29 Circumstances where a certificate of release to service is not required
30 Contents of a certificate of release to service
31 Who may issue a certificate of release to service
32 Requirement for a certificate of release to service for EASA aircraft
33 Licensing of maintenance engineers
34 Aircraft, engine and propeller log books for non-EASA aircraft
35 Aircraft weight schedule
36 Access and inspection for airworthiness purposes

PART 3A CONTINUING AIRWORTHINESS OF AIRCRAFT WITH A NON-EXPIRING NATIONAL CERTIFICATE OF AIRWORTHINESS

36A Requirement for and validity of a national airworthiness review certificate
36B Validity of the national airworthiness review certificate
36C Other circumstances in which an aircraft must not fly
36D Initial issue of national airworthiness review certificate
36E Subsequent issue of national airworthiness review certificate
36F Aircraft maintenance programme
36G Commercial air transport aeroplanes, public transport aircraft and non-military State aircraft
36H Extension of a national airworthiness review certificate of an aircraft in a controlled environment
36I Extension of a national airworthiness review certificate of an aircraft which is not in a controlled environment which has a maximum total weight authorised of 2730kg or less
36J Extension of a national airworthiness review certificate of other aircraft which are not in a controlled environment
36J National airworthiness review certificate not to be issued or extended where aircraft not airworthy
36K Conduct of an airworthiness review
36L Conduct of an annual review
36M Approval of continuing airworthiness management organisation
36N Approval of aeroplane and rotorcraft maintenance organisation
36O General provisions concerning airworthiness reviews

PART 4 EQUIPMENT OF AIRCRAFT

37 Equipment of aircraft
38 Carriage and use of equipment
39 Radio communication and radio navigation equipment of aircraft
40 Notified radio communication and radio navigation equipment to be carried by EU-OPS aeroplanes
41 Minimum equipment requirements

PART 5 CREW REQUIRED TO BE CARRIED

42 Required flight crew of aircraft
43 Flight crew required by aircraft registered in the United Kingdom
44 Pilots required on public transport flights by flying machines over 5700kg
45 Pilots required on public transport flights by aeroplanes of 5700kg or less
46 Pilots required on public transport flights by helicopters of 5700kg or less
47 Flight navigators or navigational equipment required on public transport flights
48 Required cabin crew of aircraft
49 Power to direct additional crew to be carried

PART 6 FLIGHT CREW LICENSING – REQUIREMENT FOR LICENCE

50 Requirement for appropriate licence to act as member of flight crew of EASA aircraft registered in the United Kingdom
50A Requirement for appropriate licence to act as member of flight crew of non-EASA aircraft registered in the United Kingdom
50B Appropriate licence
51 Flight crew licence requirement – Exception to act as flight radiotelephony operator
52 Flight crew licence requirement – Exception for solo flying training in non-EASA aircraft
53 Flight crew licence requirement – Exception for dual flying training in non-EASA aircraft

54 Flight crew licence requirement – Exception for non-EASA gyroplanes at night
55 Flight crew licence requirement – Exception for non-EASA balloons
56 Flight crew licence requirement – Exception for pilot undergoing training or tests
57 Flight crew licence requirement – Exception for navigators and flight engineers
58 Flight crew licence requirement – Exception for members of HM Forces
59 Flight crew licence requirement – Exceptions for gliders
60 Flight crew licence requirement – Exception for non-EASA aircraft where CAA permission granted
61 Requirement for appropriate licence to act as member of flight crew of non-EASA aircraft registered elsewhere than in the United Kingdom
61A Requirement for appropriate licence to act as member of flight crew of EASA aircraft and specified non-EASA aircraft registered elsewhere than in the United Kingdom
62 Deeming a non-United Kingdom flight crew licence and any Part-FCL licence valid for non-EASA aircraft and deeming a non-United Kingdom radiotelephony licence valid for any aircraft
63 Permission required where licence does not meet relevant minimum standards

PART 7 FLIGHT CREW LICENSING - GRANT OF LICENCE AND MAINTENANCE OF PRIVILEGES

64 Grant, renewal and privileges of United Kingdom flight crew licences
65 Ratings and qualifications
66 Maintenance of privileges of aircraft ratings specified in Section 1 of Part B of Schedule 7 in United Kingdom pilot licences for balloons, airships, gliders and gyroplanes
67 Maintenance of privileges of aircraft ratings specified in Section 1 of Part B of Schedule 7 in United Kingdom aeroplane and helicopter licences
68 Maintenance of privileges of other ratings specified in Section 1 of Part B of Schedule 7
69 Maintenance of privileges of ratings specified in Sections 2 and 3 of Part B of Schedule 7
70 Maintenance of privileges of Flight Engineers' Licences
71 Maintenance of privileges of Flight Navigators' Licences
72 Requirement for a medical certificate for a United Kingdom licence and a National Private Pilot's Licence (Helicopters)
72A Issue and validity of a medical certificate for a United Kingdom licence and a National Private Pilot's Licence (Helicopters)
72B Requirement for a Part MED medical certificate for a Part-FCL licence
73 Requirement for a medical declaration
73A Issue and validity of a medical declaration
73B Issue of Light Aircraft Pilot Licence medical certificates
73C Occupational health medical practitioners
74 Licence holder not to act as a member of flight crew when unfit
75 Training for landing on or taking off from water

PART 8 FLIGHT CREW LICENSING – GENERAL PROVISIONS

76 Person not to fly after failing test
77 Approval of training and testing
78 Validation of licences
79 Personal flying log
80 Instruction in flying
81 Glider pilots – minimum age
82 Licences and ratings no longer to be granted
82A Status of licences issued by the CAA

PART 9 REQUIREMENT FOR OPERATIONS AND TRAINING MANUALS

83 Operations manual
84 Police operations manual
85 Training manual

PART 10 DUTIES OF COMMANDER

86 Pre-flight action by commander of aircraft other than EU-OPS aeroplanes
87 Commander to be satisfied that flight can be safely completed
88 Passenger briefing by commander
89 Public transport of passengers - commander to ensure demonstration of lifejackets
90 Public transport of passengers - commander to ensure crew, passengers and baggage secure
91 Public transport of passengers - commander to ensure demonstration of use of oxygen
92 Aerial work and private flights - commander to ensure demonstration of use of oxygen
93 Pilot to remain at controls and be secured in seat

PART 11 PUBLIC TRANSPORT OPERATIONS

94 Flight data monitoring, accident prevention and flight safety programme
95 Public transport – operator's responsibilities in relation to crew
96 Public transport – operator's responsibilities in relation to routes and aerodromes
97 Commercial air transport and public transport flights at night or in Instrument Meteorological Conditions by aeroplanes with one power unit which are registered elsewhere than in the United Kingdom

PART 12 LOADING OF PUBLIC TRANSPORT AIRCRAFT

98 Operator's duty concerning the loading of public transport aircraft
99 Requirement to load in accordance with loading instructions
100 Requirement for a load sheet
101 Carriage of baggage
102 Exceptions

PART 13 PERFORMANCE REQUIREMENTS AND OPERATING MINIMA FOR PUBLIC TRANSPORT FLIGHTS

103 Aeroplanes registered in the United Kingdom - public transport operating conditions and performance requirements
104 Helicopters registered in the United Kingdom - public transport operating conditions and performance requirements
105 Helicopters registered in the United Kingdom carrying out Performance Class 3 operations
106 Helicopters registered in the United Kingdom carrying out Performance Class 1 and 2 operations
107 Public transport aircraft registered in the United Kingdom - aerodrome operating minima
108 Public transport aircraft registered elsewhere than in the United Kingdom - aerodrome operating minima

PART 14 OPERATING MINIMA AND EQUIPMENT REQUIREMENTS FOR AERIAL WORK AND PRIVATE AIRCRAFT

109 Aerial work and private aircraft – aerodrome operating minima
110 Aerial work and private aircraft – survival equipment

PART 15 OPERATIONS – GENERAL PROVISIONS

111 Wearing of survival suits by crew
112 Operation of radio in aircraft
113 Operation of airborne collision avoidance system
114 Training in operation of airborne collision avoidance system
115 Operation of vibration health monitoring systems
116 Method of carriage of persons
117 Functioning of exits – commercial air transport aeroplanes and public transport aeroplanes and helicopters
118 Marking of exits – commercial air transport aeroplanes and public transport aeroplanes and helicopters
119 Marking of break-in areas
120 Flights over any foreign country

PART 16 HEIGHT KEEPING AND NAVIGATION

121 Minimum navigation performance
122 Height keeping performance – aircraft registered in the United Kingdom
123 Height keeping performance – aircraft registered elsewhere than in the United Kingdom
124 Area navigation and required navigation performance capabilities – aircraft registered in the United Kingdom
125 Area navigation and required navigation performance capabilities – aircraft registered elsewhere than in the United Kingdom

PART 17 TOWING AND DROPPING

126 Towing of gliders
127 Operation of self-sustaining gliders
128 Towing, picking up and raising of persons and articles
129 Dropping of articles and animals
130 Dropping of persons and grant of parachuting permissions
131 Dropping articles for purposes of agriculture etc. and grant of aerial application certificates

PART 18 DANGEROUS GOODS, WEAPONS AND MUNITIONS OF WAR

132 Carriage of dangerous goods
133 Carriage of weapons and of munitions of war – requirement for permission and for commander to be informed
134 Prohibition on carrying on board sporting weapons or munitions of war
135 Exceptions concerning carriage of weapons and munitions of war
136 Definitions

PART 19 PROHIBITED BEHAVIOUR

137 Endangering safety of an aircraft
138 Endangering safety of any person or property
139 Drunkenness in aircraft
140 Smoking in aircraft
141 Authority of commander of an aircraft
142 Acting in a disruptive manner
143 Stowaways

PART 20 FATIGUE OF CREW AND PROTECTION OF CREW FROM COSMIC RADIATION

144 Application and interpretation of Part 20
145 Fatigue of crew – operator's responsibilities
146 Fatigue of crew – responsibilities of crew
147 Flight times – responsibilities of flight crew
148 Protection of air crew from cosmic radiation
149 Fatigue of crew – EU-OPS operator's responsibilities

PART 21 DOCUMENTS AND RECORDS

150 Documents to be carried
151 Keeping and production of records of exposure to cosmic radiation
152 Use of flight recording systems
153 Preservation of records of aeroplane flight data recorder
154 Preservation of records of helicopter flight data recorder
155 Preservation of records of helicopter cockpit voice recorder/flight data recorder
156 Production of documents and records
157 Production of air traffic service equipment documents and records
158 Power to inspect and copy documents and records
159 Preservation of documents, etc.

PART 22 AIRCRAFT IN FLIGHT

160 Rules of the Air
161 Power to prohibit or restrict flying
162 Flying displays
163 Balloons
164 Gliders, kites and parascending parachutes
165 Airships
166 Small unmanned aircraft
167 Small unmanned surveillance aircraft
168 Rockets

PART 23 AIR TRAFFIC SERVICES

169 Requirement for an air traffic control approval
170 Duty of person in charge to satisfy himself as to competence of controllers
171 Manual of air traffic services
172 Provision of air traffic services
173 Making of an air traffic direction in the interests of safety
174 Making of a direction for airspace policy purposes
175 Use of radio call signs at aerodromes
176 Approval of instrument flight procedures

PART 24 LICENSING OF AIR TRAFFIC CONTROLLERS

177 Prohibition of unlicensed student air traffic controllers and air traffic controllers
185 Period for which a student air traffic controller licence remains in force
185A Inclusion of national endorsements
193 Fatigue of air traffic controllers
194 Acting under the influence of psychoactive substances or medicines
195 Failing exams, assessments or tests
196 Use and approval of simulators
197 Approval of courses, persons and simulators
198 Certification of training organisations
199 Certified training organisation: production of records
200 Deleted
201 Meaning of terms used in this Part

PART 25 FLIGHT INFORMATION SERVICES AND LICENSING OF FLIGHT INFORMATION SERVICE OFFICERS

202 Prohibition of unlicensed flight information service officers
203 Licensing of flight information service officers
204 Flight information service manual

PART 25A CERTIFICATE OF COMPETENCE TO OPERATE AN AERONAUTICAL RADIO STATION

204A Prohibition of unauthorised operation of an aeronautical radio station
204B Aeronautical radio station operator certificate of competence
204C Approval of courses, persons, examinations and simulators

PART 26 AIR TRAFFIC SERVICE EQUIPMENT

205 Air traffic service equipment
206 Air traffic service equipment records

PART 27 AERODROMES, AERONAUTICAL LIGHTS AND DANGEROUS LIGHTS

207 Requirement to use licensed or Government aerodrome
208 Flights which must use licensed or Government aerodrome
208A Aerodromes – use for purposes of flying instruction and testing
209 Helicopters flying for public transport at night
210 Use of Government aerodromes
211 Licensing of aerodromes
212 Public use licence
213 Charges at aerodromes with a public use licence
214 Use of aerodromes by aircraft of Contracting States and of the Commonwealth
214A Power of aerodrome firefighters in an emergency
215 Noise and vibration caused by aircraft on aerodromes
216 Customs and Excise aerodromes
217 Aviation fuel at aerodromes

PART 28 LIGHTS AND LIGHTING

218 Aeronautical lights
219 Lighting of en-route obstacles
220 Lighting of wind turbine generators in United Kingdom territorial waters
221 Lights liable to endanger
222 Lights which dazzle or distract

PART 29 PUBLIC TRANSPORT AND AERIAL WORK BY FOREIGN REGISTERED AIRCRAFT

223 Restriction on carriage for valuable consideration in aircraft registered elsewhere than in the United Kingdom
224 Filing and approval of tariffs
225 Restriction on aerial photography, aerial survey and aerial work in aircraft registered elsewhere than in an EEA state

PART 30 MANDATORY REPORTING

226 Mandatory reporting of occurrences
227 Mandatory reporting of birdstrikes

PART 31 POWERS AND PENALTIES

228 Revocation, suspension and variation of certificates, licences and other documents
229 Provisional suspension or variation of EASA certificates, licences and other documents

230 Revocation, suspension and variation of permissions, etc. granted under article 223 or article 225
231 Prohibitions in relation to documents and records
232 CAA's power to prevent aircraft flying
233 Power to prevent third-country aircraft taking off
234 Notifying competent authority of the detention of a third-country aircraft
235 Revocation of article 233 direction when validity of certificate of airworthiness affected
236 Secretary of State's power to prevent aircraft flying
237 Directions to operators of aircraft to make data available
238 Right of access to aerodromes and other places
239 Obstruction of persons
240 Directions and directives
241 Offences and penalties
242 Exemption from Order
243 Appeal to County Court or Sheriff Court
244 Approval of persons to supply reports
245 Certificates, authorisations, approvals and permissions
246 Competent authority

PART 32 APPLICATION OF THE ORDER

247 Extra-territorial effect of the Order
248 Aircraft in transit over certain United Kingdom territorial waters
249 Application of Order to British-controlled aircraft registered elsewhere than in the United Kingdom
250 Application of Order to the Crown
251 Application of the Order to visiting forces
252 Application of the Order to military aircraft
253 Exceptions from application of provisions of the Order for certain classes of aircraft
254 Saving

PART 33 INTERPRETATION

255 Interpretation
256 Meaning of in flight
257 Meaning of operator
258 Meaning of aerodrome traffic zone
259 Meaning of aerial work
260 Meaning of public transport

PART 34 PUBLIC TRANSPORT AND AERIAL WORK

261 Application of Part
262 Public transport – special rules for hire of aircraft
263 Public transport – special rule for associations of persons
264 Public transport – special rule for groups of companies
265 Public transport and aerial work – exceptions – flying displays
266 Public transport and aerial work – exceptions – charity flights
267 Public transport and aerial work – exceptions – cost sharing
268 Public transport and aerial work – exceptions – recovery of direct costs
269 Public transport and aerial work – exceptions – jointly owned aircraft
270 Public transport and aerial work – exceptions – parachuting

SCHEDULES

SCHEDULE 1	Revocations
SCHEDULE 2	A and B Conditions and categories of certificate of airworthiness
PART A	
PART B	Categories of certificate of airworthiness and purposes for which aircraft may fly
SCHEDULE 3	Classification and marking of aircraft and dealer certification
PART A	Classification of aircraft
PART B	Conditions in aircraft dealer's certificate
PART C	Nationality and registration marks of aircraft registered in the United Kingdom
SCHEDULE 4	Aircraft equipment
SCHEDULE 5	Radio communication and radio navigation equipment to be carried in aircraft
SCHEDULE 6	Aircraft, engine and propeller log books
SCHEDULE 7	Flight crew of aircraft – licences, ratings, qualifications and maintenance of licence privileges
PART A	Flight crew licences
PART B	Ratings and qualifications
PART C	Maintenance of licence privileges
SCHEDULE 8	Public transport – operational requirements
PART A	Information and instructions which must be included in an operations manual
PART B	Information and instructions which must be included in a training manual
PART C	Required crew training, experience, practice and periodical tests
SCHEDULE 9	Documents to be carried
SCHEDULE 10	Deleted
SCHEDULE 11	Air traffic service equipment – records required and matters to which the CAA may have regard
PART A	Records to be kept in accordance with article 206(1)(a)
PART B	Records required in accordance with article 206(5)(b)
PART C	Matters to which the CAA may have regard in granting an approval of apparatus in accordance with article 206(6)
SCHEDULE 12	Information and instructions which must be included in an aerodrome manual
SCHEDULE 13	Penalties
PART A	Provisions referred to in article 241(5)
PART B	Provisions referred to in article 241(6)
PART C	Provisions referred to in article 241(7)
PART D	Provisions referred to in article 241(8)
SCHEDULE 14	Parts of straits specified in connection with the flight of aircraft in transit over United Kingdom territorial waters

PART 1 REGISTRATION AND MARKING OF AIRCRAFT

Aircraft to be registered

3 (1) Subject to paragraphs (2), (3) and (4) an aircraft must not fly in or over the United Kingdom unless it is registered in:

(a) some part of the Commonwealth;

(b) a Contracting State; or

(c) some other country in relation to which there is in force an agreement between Her Majesty's Government in the United Kingdom and the Government of that country which makes provision for the flight over the United Kingdom of aircraft registered in that country.

(2) A non-EASA glider may fly unregistered, and will be deemed to be registered in the United Kingdom for the purposes of articles 37, 39, 50A, 86 and 87, on any flight which:

(a) begins and ends in the United Kingdom without passing over any other country; and

(b) is not for the purpose of public transport or aerial work other than aerial work which consists of instruction or testing in a club environment.

(3) A non-EASA aircraft may fly unregistered on any flight which:

(a) begins and ends in the United Kingdom without passing over any other country; and

(b) is in accordance with the B Conditions.

(4) Paragraph (1) shall not apply to any non-EASA kite or non-EASA captive balloon.

(5) If an aircraft flies in or over the United Kingdom in contravention of paragraph (1) in such manner or circumstances that if the aircraft had been registered in the United Kingdom an offence in respect of a contravention of a provision specified in Schedule 13 would have been committed, that same offence will be deemed to have been committed in respect of that aircraft.

CAA to register aircraft in the United Kingdom

4 (1) The CAA is the authority for the registration of aircraft in the United Kingdom.

(2) The CAA is responsible for maintaining the register and may record in the register the information specified in article 6(2) in a legible or a non-legible form so long as the recording is capable of being reproduced in a legible form.

(3) Subject to the provisions of this article, an aircraft must not be registered or continue to be registered in the United Kingdom if it appears to the CAA that:

(a) the aircraft is registered outside the United Kingdom and that such registration does not cease by operation of law when the aircraft is registered in the United Kingdom;

(b) an unqualified person holds any legal or beneficial interest by way of ownership in the aircraft or any share in the aircraft;

(c) the aircraft could more suitably be registered in some other part of the Commonwealth; or

(d) it would not be in the public interest for the aircraft to be or to continue to be registered in the United Kingdom.

* SI 2011/2432
** SI 2012/1751

Who may register aircraft in the United Kingdom

5 (1) Only the following persons are qualified to hold a legal or beneficial interest by way of ownership in an aircraft registered in the United Kingdom or a share in such an aircraft:

(a) the Crown in right of Her Majesty's Government in the United Kingdom and the Crown in right of the Scottish Administration;

(b) Commonwealth citizens;

(c) nationals of any EEA State;

(d) British protected persons;

(e) bodies incorporated in some part of the Commonwealth and having their principal place of business in any part of the Commonwealth;

(f) undertakings formed in accordance with the law of an EEA State which have their registered office, central administration or principal place of business within the European Economic Area; or

(g) firms carrying on business in Scotland and in this sub-paragraph 'firm' has the same meaning as in the Partnership Act 1890[(a)].

(2) If an unqualified person resides or has a place of business in the United Kingdom and holds a legal or beneficial interest by way of ownership in an aircraft, or a share in an aircraft, the CAA may register the aircraft in the United Kingdom if it is satisfied that the aircraft may otherwise be properly registered.

(3) If an unqualified person has registered an aircraft under paragraph (2) that person must not cause or permit the aircraft to be used for the purpose of commercial air transport, public transport or aerial work while it is so registered.

(4) If an aircraft is chartered by demise to a person qualified under paragraph (1) the CAA may, whether or not an unqualified person is entitled as owner to a legal or beneficial interest in the aircraft, register the aircraft in the United Kingdom in the name of the charterer by demise if it is satisfied that the aircraft may otherwise be properly registered.

(5) Subject to the provisions of this Part, an aircraft registered under paragraph (4) may remain registered during the continuation of the charter.

Application for registration

6 (1) An application for the registration of an aircraft in the United Kingdom must be made in writing to the CAA and must:

(a) include or be accompanied by such information and evidence relating to the aircraft and the ownership and chartering of the aircraft as the CAA may require to enable it to determine whether the aircraft may properly be registered in the United Kingdom and to issue the certificate of registration; and

(b) include the proper description of the aircraft according to column 3 of the 'Classification of aircraft' in Part A of Schedule 3.

(2) If the CAA receives an application for the registration of an aircraft in the United Kingdom and is satisfied that the aircraft may properly be so registered, the CAA must register the aircraft, wherever it may be, and include in the register the following information:

(a) 1890 c.39.

(a) the number of the certificate;

(b) the nationality mark of the aircraft and the registration mark assigned to it by the CAA;

(c) the name of the constructor of the aircraft and its designation;

(d) the serial number of the aircraft;

(e) the name and address of every person who is entitled as owner to a legal interest in the aircraft or a share of the aircraft or, in the case of an aircraft which is the subject of a charter by demise, the name and address of the charterer by demise; and

(f) in the case of an aircraft registered under article 5(2) or 5(4), an indication that it is so registered.

(3) Subject to paragraph (5) the CAA must supply to the registered owner a certificate of registration.

(4) A certificate of registration must include the information specified in paragraph (2) and the date on which the certificate was issued.

(5) The CAA is not required to supply a certificate of registration if:

(a) the registered owner is the holder of an aircraft dealer's certificate granted under this Order; and

(b) the registered owner has made to the CAA (and has not withdrawn) a statement of the registered owner's intention that the aircraft is to fly only in accordance with the conditions in an aircraft dealer's certificate set out in Part B of Schedule 3.

(6) If a statement under paragraph (5)(b) has been made and not withdrawn, the aircraft must be flown only in accordance with the conditions in the aircraft dealer's certificate set out in Part B of Schedule 3.

(7) The CAA may grant an aircraft dealer's certificate to any person who is qualified under article 5(1) if it is satisfied that that person has a place of business in the United Kingdom for buying and selling aircraft.

Changes to the register

7 (1) Subject to articles 5(2) and (4) and 8(1), if at any time after an aircraft has been registered in the United Kingdom an unqualified person becomes entitled to a legal or beneficial interest by way of ownership in the aircraft or a share in the aircraft, the registration of the aircraft becomes void and the certificate of registration must be returned immediately by the registered owner to the CAA.

(2) Any person who is the registered owner of an aircraft registered in the United Kingdom must immediately inform the CAA in writing of:

(a) any change in the information supplied to the CAA when applying for the registration of the aircraft;

(b) the destruction of the aircraft, or its permanent withdrawal from use; or

(c) in the case of an aircraft registered under article 5(4), the termination of the charter by demise.

(3) Any person who becomes the owner of an aircraft registered in the United Kingdom must within 28 days of becoming the owner inform the CAA in writing to that effect.

(4) Subject to article 8(2) the CAA may, whenever it appears necessary or appropriate in order to give effect to this Part or to bring up to date or otherwise correct the register, amend the register or cancel the registration of an aircraft.

(5) The CAA must cancel the registration of an aircraft within two months of being satisfied that there has been a change in the ownership of the aircraft.

Aircraft which are entered in the Register of Aircraft Mortgages

8 (1) The registration of an aircraft which is the subject of an undischarged mortgage entered in the Register of Aircraft Mortgages kept by the CAA under an Order in Council made under section 86 of the Civil Aviation Act 1982[(a)] does not become void by virtue of article 7(1).

(2) The CAA must not cancel the registration of such an aircraft under article 7(4) unless all persons shown in the Register of Aircraft Mortgages as mortgagees of that aircraft have consented to the cancellation.

General provisions concerning registration

9 (1) The Secretary of State may, by regulations, adapt or modify the foregoing provisions of this Part as he deems necessary or expedient for the purpose of providing for the temporary transfer of aircraft to or from the United Kingdom register, either generally or in relation to a particular case or class of cases.

(2) In this Part and in Part B of Schedule 3 'the registered owner' means the person in whose name the aircraft is registered in accordance with article 6(2).

(3) The reference in article 7(2) to the registered owner of an aircraft includes, in the case of a deceased person, their legal personal representative, and in the case of a body corporate which has been dissolved, its successor.

(4) In this Part references to an interest in an aircraft do not include references to an interest in an aircraft to which a person is entitled only by virtue of the person's membership of a flying club.

(5) Nothing in this Part requires the CAA to cancel the registration of an aircraft if in its opinion it would not be in the public interest to do so.

(6) Any provision in this Part which requires the giving of information to the CAA in writing may be met by means of an electronic communication if the use of such a communication results in the information contained in that communication being available to the CAA in all material respects as it would appear if given or sent in printed form.

Nationality and registration marks

10 (1) An aircraft (other than an aircraft permitted by or under this Order to fly without being registered) must not fly unless it has painted or fixed on it, in the manner required by the law of the country in which it is registered, the nationality and registration marks required by that law.

(2) The marks to be borne by aircraft registered in the United Kingdom must comply with Part C of Schedule 3.

(3) Subject to paragraph (4), an aircraft must not bear any marks which would indicate:

(a) that the aircraft is registered in a country in which it is not in fact registered; or

(a) 1982 c.16; to which there are amendments not relevant to this provision.

(b) that the aircraft is a State aircraft of a particular country if it is not in fact such an aircraft, unless the appropriate authority of that country has sanctioned the bearing of such marks.

(4) Marks approved by the CAA for the purposes of flight in accordance with the B Conditions do not mean that the aircraft is registered in a country in which it is not in fact registered.

INTENTIONALLY LEFT BLANK

PART 2 AIR OPERATORS' CERTIFICATES AND OPERATIONAL DIRECTIVES

Requirement for an EU-OPS air operator certificate

11 A person must not operate an aeroplane registered in the United Kingdom on a commercial air transport flight otherwise than under and in accordance with the terms of an EU-OPS air operator certificate granted to the operator of the aircraft by the CAA.

Requirement for and grant of national air operator's certificate

12 (1) Subject to article 13, an aircraft registered in the United Kingdom must not fly on a public transport flight, otherwise than under and in accordance with the terms of:

(a) a national air operator's certificate granted to the operator of the aircraft under paragraph (2), certifying that the holder of the certificate is competent to secure that aircraft operated by him on such flights are operated safely; or

(b) an EU-OPS air operator certificate granted to the operator of the aircraft by the CAA.

(2) The CAA must grant a national air operator's certificate if it is satisfied that the applicant is competent to secure the safe operation of aircraft of the types specified in the certificate on flights of the description and for the purposes specified, having regard in particular to the applicant's:

(a) previous conduct and experience; and

(b) equipment, organisation, staffing, maintenance and other arrangements.

Requirement for and grant of police air operator's certificate

13 (1) A flight by an aircraft registered in the United Kingdom in the service of a police authority is, for the purposes of this Order, deemed to be a public transport flight.

(2) If any passenger is carried on such a flight it is deemed to be for the purpose of the public transport of passengers.

(3) Save as otherwise expressly provided, the provisions of this Order and of any regulations made under this Order must be complied with in relation to a flight in the service of a police authority as if that flight were for the purpose of public transport or the public transport of passengers.

(4) An aircraft registered in the United Kingdom must not fly on any flight in the service of a police authority otherwise than under and in accordance with the terms of:

(a) a police air operator's certificate granted to the operator;

(b) a national air operator's certificate granted to the operator; or

(c) an EU-OPS air operator certificate granted to the operator and in accordance with EU-OPS as though it were a commercial air transport flight.

(5) The CAA must grant a police air operator's certificate if it is satisfied that the applicant is competent to secure that the operation of aircraft of the types specified in the certificate will be as safe as is appropriate when flying on flights of the description and for the purposes specified, having regard in particular to the applicant's:

(a) previous conduct and experience; and

(b) equipment, organisation, staffing, maintenance and other arrangements.

Offering commercial transport and public transport flights

14 (1) No person may hold anyone out (whether the person who is being held out is the same person as the one who is holding out or is another person) as being one who may offer flights in an aircraft registered in the United Kingdom for the purpose of public transport or commercial air transport unless the person being held out holds:

(a) in the case of a public transport flight, a valid national air operator's certificate or a valid EU-OPS air operator certificate; or

(b) in the case of a commercial air transport flight, a valid EU-OPS air operator certificate.

(2) Paragraph (1) does not apply where:

(a) the person being held out as offering such a flight has applied for a national air operator's certificate or an EU-OPS air operator certificate; and

(b) the person holding out reasonably believes that the person being held out will hold such a certificate by the time the offered flight is made.

Operational directives

15 (1) The CAA may direct an aircraft operator by means of an operational directive that an operation is prohibited, or must be limited or is subject to specified conditions, in the interests of safe operations.

(2) An operational directive must state:

(a) the reason for its issue;

(b) its applicability and duration; and

(c) the action required by the operator.

(3) An operational directive may be made in respect of one or more operators or one or more classes of operator.

(4) An operational directive which applies to an EU-OPS operator in relation to a commercial air transport flight must be made subject to and in accordance with article 8 of the Technical Harmonisation Regulation.

(5) An operational directive ceases to have effect if:

(a) it is withdrawn by the CAA; or

(b) it is revoked by the CAA following a finding made in accordance with article 8(1) of the Technical Harmonisation Regulation, that the directive is found not to be justified.

(6) The CAA must revoke a directive if it is found not to be justified under article 8(1) of the Technical Harmonisation Regulation.

PART 3 AIRWORTHINESS OF AIRCRAFT

Certificate of airworthiness to be in force

16 (1) Subject to paragraphs (2) and (3), an aircraft must not fly unless there is in force for the aircraft a certificate of airworthiness issued or rendered valid under the law of the country in which the aircraft is registered or the State of the operator, and any conditions subject to which the certificate was issued or rendered valid are complied with.

(2) The prohibition in paragraph (1) does not apply to flights, beginning and ending in the United Kingdom without passing over any other country, of:

(a) a non-EASA glider flying on a private flight or an aerial work flight which consists of the giving of instruction or testing in a club environment;

(b) a non-EASA balloon flying on a private flight;

(c) a non-EASA kite;

(d) a non-EASA aircraft flying in accordance with the A Conditions or the B Conditions;

(e) an aircraft flying in accordance with a national permit to fly;

(f) an aircraft flying in accordance with a certificate of validation issued by the CAA under article 24; or

(g) a microlight aeroplane which:

(i) is designed to carry one person only;

(ii) has a maximum weight without its pilot and fuel of 115kg;

(iii) has a maximum wing loading without its pilot and fuel of 10kg per square metre; and

(iv) is flying on a private flight.

(3) The prohibition in paragraph (1) does not apply to flights by an aircraft flying in accordance with an EASA permit to fly:

(a) issued by the CAA; or

(b) issued by the competent authority of a Member State other than the United Kingdom which permits the aircraft to fly outside the airspace of the issuing State.

(4) In the case of a non-EASA aircraft registered in the United Kingdom, the certificate of airworthiness referred to in paragraph (1) is, subject to article 17, a national certificate of airworthiness.

(5) In the case of an EASA aircraft registered in the United Kingdom, the certificate of airworthiness referred to in paragraph (1) is an EASA certificate of airworthiness issued by the CAA.

(6) For the purposes of paragraph (1) a certificate of airworthiness:

(a) includes an EASA restricted certificate of airworthiness issued by the CAA; and

(b) includes an EASA restricted certificate of airworthiness issued by the competent authority of a Member State other than the United Kingdom which permits the aircraft to fly outside the airspace of the issuing State.

(7) An aircraft registered in the United Kingdom with an EASA certificate of airworthiness must not fly otherwise than in accordance with any conditions or limitations contained in its flight manual unless otherwise permitted by the CAA.

(8) An aircraft flying clear of cloud and with the surface in sight is, for the purposes of this article, deemed to be flying in accordance with the Visual Flight Rules.

Certificate of airworthiness for State aircraft registered in the United Kingdom

17 (1) This article applies to a non-EASA aircraft registered in the United Kingdom which is a State aircraft but which is not a military aircraft.

(2) There must be in force for the aircraft either a national certificate of airworthiness or an EASA certificate of airworthiness issued by the CAA.

(3) If there is in force an EASA certificate of airworthiness issued by the CAA the aircraft must:

(a) comply with the Basic EASA Regulation and any implementing rules made under that Regulation which would apply if it were an EASA aircraft;

(b) comply with any United Kingdom national requirements made in accordance with article 14 of the Basic EASA Regulation and published in Part 1 of Section 2 of CAP 747 which would apply if it were an EASA aircraft;

(c) comply with any United Kingdom national requirements for State aircraft published in Section 2 of CAP 747; and

(d) not fly within the airspace of another State without the permission of the competent authority of that State.

(4) In this article, "CAP 747" means the document entitled "Mandatory Requirements for Airworthiness" published by The Stationery Office on behalf of the CAA (First Edition Issue 3 dated 29th January 2010)[(a)].

Issue and renewal of national certificates of airworthiness

18 (1) Subject to paragraph (2), the CAA must issue for any non-EASA aircraft registered in the United Kingdom a national certificate of airworthiness if it is satisfied that the aircraft is fit to fly having regard to:

(a) the design, construction, workmanship and materials of the aircraft (including in particular any engines fitted in the aircraft), and of any equipment carried in the aircraft which it considers necessary for the airworthiness of the aircraft; and

(b) the results of flying trials, and such other tests of the aircraft as it may require.

(1A) (a) A national certificate of airworthiness issued by the CAA on or after 10th August 2012 must be a non-expiring national certificate of airworthiness.

(b) A national certificate of airworthiness issued by the CAA before that date will expire on the date specified in the certificate.

(2) If the CAA has issued a national certificate of airworthiness for an aircraft which, in its opinion, is a prototype aircraft or a modification of a prototype aircraft, it may dispense with flying trials in the case of any other aircraft if it is satisfied that the other aircraft conforms to such prototype or modification.

(a) ISBN-13 978 0 11792 369 0.

* SI 2010/770

** SI 2012/1751

(3) (a) Every national certificate of airworthiness must specify whether it is a Standard or Special Category certificate according to which is, in the opinion of the CAA, appropriate to the aircraft.

(b) A Special Category certificate must be issued subject to the condition that the aircraft may be flown only for the purposes indicated in Part B of Schedule 2 in relation to that category.

(4) The CAA may issue a national certificate of airworthiness subject to such other conditions relating to the airworthiness of the aircraft as it thinks fit.

(5) The CAA may issue a certificate of validation.

(6) Nothing in this Order obliges the CAA to accept an application for the issue of a national certificate of airworthiness or certificate of validation or for the variation or renewal of any such certificate if the application is not supported by such reports from such persons approved under article 244 as the CAA may specify, either generally or in a particular case or class of cases.

(7) In this article, a certificate of validation means a certificate rendering valid for the purposes of this Order a certificate of airworthiness issued for any aircraft registered elsewhere than in the United Kingdom under the law of any country other than the United Kingdom.

National certificate of airworthiness ceasing to be in force and issue of airworthiness directives for non-EASA aircraft

19 (1) Subject to paragraph (3), a national certificate of airworthiness or a certificate of validation issued for a non-EASA aircraft registered in the United Kingdom ceases to be in force if:

(a) the aircraft or any part of the aircraft or such of its equipment as is necessary for the airworthiness of the aircraft has been overhauled, repaired, replaced, modified or maintained;

(b) maintenance or an inspection of the aircraft or of any equipment necessary for the airworthiness of the aircraft is required by a maintenance schedule approved by the CAA for that aircraft under article 25;

(c) maintenance of the aircraft or of any equipment necessary for the airworthiness of the aircraft has been made mandatory by a directive issued by the CAA;

(d) an inspection for the purpose of ascertaining whether the aircraft remains airworthy has been made mandatory by a directive issued by the CAA; or

(e) any modification of the aircraft or of any equipment which is necessary for the airworthiness of the aircraft, has been made mandatory by a directive issued by the CAA for the purpose of ensuring that the aircraft remains airworthy.

(2) A certificate of airworthiness or a certificate of validation which has ceased to be in force under paragraph (1) becomes valid again on the issue of a certificate of release to service under this Order relating to the overhaul, repair, replacement, modification, maintenance or inspection.

(3) A certificate of airworthiness which would not be in force by reason of paragraph (1) remains in force if the aircraft is flying in the circumstances specified in article 28(3) or 29.

(4) In this article, a certificate of validation has the same meaning as specified in article 18(7).

* SI 2011/2432

Issue of airworthiness directives for EASA aircraft

20 (1) Subject to and in accordance with article 14(1) of the Basic EASA Regulation, the CAA may direct that an EASA aircraft must not fly until one of the following has been completed to the satisfaction of the CAA:

(a) maintenance of the aircraft or of any equipment necessary for the airworthiness of the aircraft which has been made mandatory by a directive issued by the CAA;

(b) an inspection for the purpose of ascertaining whether the aircraft remains airworthy which has been made mandatory by a directive issued by the CAA; or

(c) any modification of the aircraft or of any equipment which is necessary for the airworthiness of the aircraft and has been made mandatory by a directive issued by the CAA for the purpose of ensuring that the aircraft remains airworthy.

(2) A directive under paragraph (1) ceases to have effect if:

(a) it is withdrawn by the CAA; or

(b) it is revoked by the CAA following a finding made in accordance with article 14(3) of the Basic EASA Regulation, that the directive is found not to be justified.

(3) The CAA must revoke a directive if it is found not to be justified under article 14(3) of the Basic EASA Regulation.

Issue of national permits to fly

21 (1) Subject to paragraph (2), the CAA must issue for any non-EASA aircraft registered in the United Kingdom a national permit to fly if it is satisfied that the aircraft is fit to fly having regard to the airworthiness of the aircraft and the conditions to be attached to the permit.

(2) The CAA must refuse to issue a national permit to fly for a non-EASA aircraft registered in the United Kingdom if it appears to the CAA that the aircraft is eligible for, and ought to fly under and in accordance with, a national certificate of airworthiness.

(3) The CAA may issue a national permit to fly subject to such conditions relating to the airworthiness, operation or maintenance of the aircraft as it thinks fit.

(4) Nothing in this Order obliges the CAA to accept an application for the issue, variation }or renewal of a national permit to fly if the application is not supported by such reports from such persons approved under article 244 as the CAA may specify, either generally or in a particular case or class of cases.

National permits to fly ceasing to be in force and issue of airworthiness directives for permit aircraft

22 (1) A national permit to fly ceases to be in force if:

(a) the CAA has issued a directive that requires:

(i) an inspection to be carried out for the purpose of ascertaining whether the aircraft remains airworthy; or

(ii) modification or maintenance of the aircraft or any of its equipment necessary for the airworthiness of the aircraft for the purpose of ensuring that the aircraft remains airworthy; or

(b) completion of an inspection, modification or maintenance of the aircraft is required as a condition of the permit to fly.

(2) A national permit to fly which has ceased to be in force under paragraph (1) comes into force again as soon as:

(a) any such inspection, modification or maintenance has been satisfactorily completed; and

(b) in the case of an inspection, any consequential repair, replacement or modification has been satisfactorily carried out.

(3) A national permit to fly ceases to be in force:

(a) if any condition (other than a condition of the permit requiring an inspection, modification or maintenance) is not complied with;

(b) if the aircraft, engines or propellers, or such of its equipment as is necessary for the airworthiness of the aircraft, are modified or repaired, unless the repair or modification has been approved by the CAA or by a person approved by the CAA for that purpose.

(4) A national permit to fly is not in force unless the permit includes a current certificate of validity issued by the CAA or by a person approved by the CAA for that purpose.

(5) In this article a certificate of validity means a certificate which certifies that a national permit to fly remains valid for the period specified in the certificate and a certificate of validity is current during that period.

Limitations of national permits to fly

23 (1) Subject to paragraph (3), an aircraft flying in accordance with a national permit to fly must not fly for the purpose of:

(a) commercial air transport;

(b) public transport; or

(c) aerial work other than aerial work which consists of flights for the purpose of flying displays, associated practice, test and positioning flights or the exhibition or demonstration of the aircraft.

(2) No person may be carried during flights for the purpose of flying displays or demonstration flying (except for the minimum required flight crew), unless the prior permission of the CAA has been obtained.

(3) An aircraft flying in accordance with a national permit to fly may fly for the purpose of aerial work which consists of instruction or testing in a club environment if it does so with the permission of the CAA.

(4) A placard must be affixed to any aircraft flying in accordance with a permit to fly in full view of the occupants which must be worded as follows:

Occupant Warning

This aircraft has not been certificated to an International Requirement

(5) An aircraft flying in accordance with a permit to fly may only be flown by day and in accordance with the Visual Flight Rules unless the prior permission of the CAA has been obtained.

(6) In paragraph (5) 'day' means the time from half an hour before sunrise until half an hour after sunset (both times exclusive), sunset and sunrise being determined at surface level.

Issue and validity of certificates of validation of permits to fly or equivalent documents

24 (1) In this article, a certificate of validation means a certificate authorising an aircraft registered elsewhere than in the United Kingdom to fly in the United Kingdom.

(2) The CAA must issue a certificate of validation if it is satisfied that the aircraft has a permit to fly or equivalent document issued or validated by the competent authority of the country in which the aircraft is registered and the authority applies standards which are substantially equivalent to those required for the issue of a permit to fly by the CAA.

(3) An aircraft flying in accordance with a certificate of validation must not fly for the purpose of:

(a) commercial air transport;

(b) public transport; or

(c) aerial work other than aerial work which consists of flights for the purpose of flying displays, associated practice, test and positioning flights or the exhibition or demonstration of the aircraft.

(4) The CAA may issue a certificate of validation subject to such conditions relating to the airworthiness, operation or maintenance of the aircraft as it thinks fit.

Requirement for an approved maintenance schedule and a certificate of maintenance review for non-EASA aircraft

25 (1) Subject to paragraph (7), a non-EASA aircraft registered in the United Kingdom for which a certificate of airworthiness is in force must not fly unless the aircraft (including its engines), together with its equipment and radio station, is maintained in accordance with a maintenance schedule approved by the CAA for that aircraft.

(2) Subject to paragraph (7), a non-EASA aircraft registered in the United Kingdom for which a certificate of airworthiness is in force and which is a commercial air transport aeroplane or a public transport or aerial work aircraft must not fly unless there is in force a certificate of maintenance review.

(3) A certificate of maintenance review means a certificate which certifies the date on which the last maintenance review of an aircraft required by an approved maintenance schedule was carried out and the date when the next such review is due.

(4) A certificate of maintenance review must be issued in accordance with article 26.

(5) A maintenance schedule approved under paragraph (1) must specify the occasions on which a review must be carried out for the purpose of issuing a certificate of maintenance review.

(6) In approving a maintenance schedule the CAA may direct that certificates of maintenance review relating to that schedule, or to any part of the schedule specified in the direction, may be issued only by the holder of such licence as is specified in the direction.

(7) Paragraphs (1) and (2) do not apply to an aircraft with a non-expiring national certificate of airworthiness.

Issue of a certificate of maintenance review for non-EASA aircraft

26 (1) A certificate of maintenance review may be issued for the purposes of article 25 only by:

(a) the holder of an aircraft maintenance engineer's licence granted under this Order which entitles the holder to issue that certificate;

* SI 2011/2432
** SI 2012/1751

(b) the holder of an aircraft maintenance engineer's licence granted under the law of a country other than the United Kingdom and rendered valid under this Order in accordance with the privileges endorsed on the licence;

(c) a person whom the CAA has authorised to issue a certificate of maintenance review in a particular case, and in accordance with that authority;

(d) a person approved by the CAA as being competent to issue such a certificate, and in accordance with that approval; or

(e) the holder of an aircraft maintenance licence granted by the CAA under Part 66, in accordance with the privileges endorsed on the licence.

(2) A person referred to in paragraph (1) must not issue a certificate of maintenance review without first verifying that:

(a) maintenance has been carried out on the aircraft in accordance with the maintenance schedule approved for that aircraft;

(b) inspections and modifications required by the CAA under article 19, have been completed as certified in the relevant certificate of release to service issued under this Order or under Part 145;

(c) defects entered in the technical log or approved record of the aircraft in accordance with article 27 have been rectified or the rectification of the defects has been deferred in accordance with procedures approved by the CAA; and

(d) certificates of release to service have been issued:

(i) under this Order or in accordance with paragraph 21A.163(d) of Part 21 for an aircraft to which article 28 applies; or

(ii) under Part 145 for an aircraft required to be maintained in accordance with Part 145,

and for this purpose the operator of the aircraft must make available to that person such information as is necessary.

(3) A certificate of maintenance review must be issued in duplicate.

(4) One copy of the most recently issued certificate of maintenance review must be carried in the aircraft when article 150 so requires, and the other must be kept by the operator elsewhere than in the aircraft.

(5) Subject to article 159, each certificate of maintenance review must be preserved by the operator of the aircraft for at least two years after it has been issued.

Technical Log for non-EASA aircraft

27 (1) This article applies to each non-EASA aircraft registered in the United Kingdom for which a certificate of airworthiness is in force and which is a public transport or aerial work aircraft.

(2) Subject to paragraph (3), a technical log must be kept for every aircraft to which this article applies.

(3) In the case of an aircraft which has a maximum total weight authorised of 2730kg or less and which is not operated by the holder of a national air operator's certificate, a record approved by the CAA (in this article called 'an approved record') may be kept instead of a technical log.

(4) Subject to paragraph (5), at the end of every flight the commander must enter in the technical log or the approved record:

(a) the times when the aircraft took off and landed;

(b) information about any defect which is known to him and which affects the airworthiness or safe operation of the aircraft, or if no such defect is known to him, an entry to that effect; and

(c) such other information about the airworthiness or operation of the aircraft as the CAA may require,

and must sign and date the entries.

(5) Subject to paragraph (6), if there are two or more consecutive flights, each of which begins and ends:

(a) within the same period of 24 hours;

(b) at the same aerodrome, except where each such flight is for the purpose of dropping or projecting any material for agricultural, public health or similar purposes; and

(c) with the same person as commander of the aircraft,

the commander may make the entries specified in paragraph (4) at the end of the last of such consecutive flights.

(6) Paragraph (5) does not apply if the commander becomes aware of a defect during an earlier flight.

(7) When any defect which has been entered in a technical log or approved record is rectified the person issuing a certificate of release to service issued under this Order or under Part 145 in respect of that defect must enter the certificate in the technical log or approved record in such a position as to be readily identifiable with the defect to which it relates.

(8) Subject to paragraph (9) the technical log or approved record must be carried in the aircraft when article 150 so requires and a copy of the entries required by this article must be kept on the ground.

(9) In the case of an aeroplane which has a maximum total weight authorised of 2730kg or less, or a helicopter, if it is not reasonably practicable for the copy of the technical log or approved record to be kept on the ground it may be carried in the aeroplane or helicopter in a container approved by the CAA for that purpose.

(10) Subject to article 159, a technical log or approved record required by this article must be preserved by the operator of the aircraft to which it relates for at least two years after the aircraft has been destroyed or has been permanently withdrawn from use, or for such shorter period as the CAA may permit in a particular case.

Requirement for a certificate of release to service for non-EASA aircraft

28 (1) This article applies to each non-EASA aircraft registered in the United Kingdom which has a certificate of airworthiness, except any such aircraft which is required to be maintained in accordance with Part 145.

(2) Subject to paragraph (3) and article 29, if an aircraft or any part of the aircraft or such of its equipment as is necessary for the airworthiness of the aircraft has been overhauled, repaired, replaced, modified, maintained, or has been inspected as provided in article 19(1)(b) or (d) that aircraft must not fly unless there is in force for the aircraft a certificate of release to service issued under and in accordance with this Order.

(3) If a repair or replacement of a part of an aircraft or its equipment is carried out when the aircraft is at a place where it is not reasonably practicable:

(a) for the repair or replacement to be carried out in such a manner that a certificate of release to service under this Order can be issued; or

(b) for such a certificate to be issued while the aircraft is at that place,

it may fly to a place which satisfies each of the criteria in paragraph (5).

(4) If the aircraft flies in the circumstances referred to in paragraph (3), the commander of the aircraft must cause written information about the flight, and the reasons for making it, to be given to the CAA within 10 days.

(5) A place satisfies the criteria in this paragraph if it is:

(a) the nearest place at which a certificate of release to service under this Order can be issued;

(b) a place to which the aircraft can, in the reasonable opinion of the commander, safely fly by a route for which it is properly equipped; and

(c) a place to which it is reasonable to fly having regard to any hazards to the liberty or health of any person on board.

(6) Subject to paragraph (8), equipment provided in compliance with Schedule 4 (except equipment specified in paragraph 4 of the Schedule) must not be installed or placed on board for use in an aircraft after being overhauled, repaired, modified or inspected.

(7) Subject to paragraph (8), radio communication and radio navigation equipment provided for use in an aircraft or in any survival craft carried in an aircraft, whether or not such equipment is provided in compliance with Schedule 5 or any other provision of this Order or any regulations made under this Order, must not be installed or placed on board for use in an aircraft after being overhauled, repaired, modified or inspected.

(8) Equipment specified in paragraphs (6) and (7) may be installed or placed on board for use in an aircraft if there is in force for the equipment, at the time when it is installed or placed on board, a certificate of release to service issued under this Order.

Circumstances where a certificate of release to service is not required

29 (1) A certificate of release to service is not required to be in force for an aircraft which has a maximum total weight authorised of not more than 2730kg and to which article 28 applies if there is in force a certificate of airworthiness in the Special Category referred to in Part B of Schedule 2, unless the CAA gives a direction to the contrary in a particular case.

(2) A certificate of release to service is not required to be in force for a private aircraft to which article 28 applies which has a maximum total weight authorised of not more than 2730kg if it flies in the circumstances specified in paragraph (3).

(3) The circumstances referred to in paragraph (2) are:

(a) the only repairs or replacements for which a certificate of release to service is not in force are of such a description as may be prescribed;

(b) such repairs or replacements have been carried out personally by the holder of a pilot's licence, which has been granted or rendered valid under this Order or is a Part-FCL licence, who is the owner or operator of the aircraft;

(c) the person carrying out the repairs or replacements keeps in the aircraft log book kept for the aircraft under article 34 a record which identifies the repairs or replacements and signs and dates the entries; and

* SI 2012/1751

(d) any equipment or parts used in carrying out such repairs or replacements are of a type approved by EASA or the CAA, either generally or in relation to a class of aircraft or the particular aircraft.

(4) An aircraft to which article 28 applies does not require to have in force a certificate of release to service issued under this Order if it has in force a certificate of release to service issued in accordance with paragraph 21A.163(d) of Part 21.

Contents of a certificate of release to service

30 (1) Where an aircraft or any part of the aircraft or its equipment has been overhauled, repaired, replaced, modified or maintained a certificate of release to service issued under this Order must:

(a) identify the overhaul, repair, replacement, modification or maintenance to which the certificate relates;

(b) include detailed information about the work done;

(c) certify that the specified work has been completed with material of a type approved by EASA or the CAA, either generally or in relation to a class of aircraft or the particular aircraft;

(d) in the case of an overhaul, removal or replacement, certify that the specified work conforms with the continuing airworthiness instructions issued by the relevant type certificate holder; and

(e) certify that:

(i) the specified work has been completed in a manner approved by EASA or the CAA, either generally or in relation to a class of aircraft or the particular aircraft; or

(ii) in the case of a repair or modification which has been classified as minor by a person authorised to do so by the CAA and approved by that person, it has been completed in accordance with that approval.

(2) A certificate of release to service issued under this Order in relation to any inspection required in accordance with article 19(1)(b) or (d) must certify that the aircraft or the part of the aircraft or its equipment which has been required to be inspected:

(a) has been inspected in accordance with the requirements; and

(b) that any consequential repair, replacement or modification has been satisfactorily carried out.

(3) In this article, a minor repair or modification means one which has no appreciable effect on the mass, balance, structural strength, reliability, operational characteristics, noise, fuel venting, exhaust emission or other characteristics affecting the airworthiness of the aircraft, part or equipment.

Who may issue a certificate of release to service

31 (1) Subject to paragraph (2), a certificate of release to service issued under this Order may be issued only by:

(a) the holder of an aircraft maintenance engineer's licence:

(i) granted under this Order, being a licence which entitles the holder to issue that certificate; or

(ii) granted under the law of a country other than the United Kingdom and rendered valid under this Order, in accordance with the privileges endorsed on the licence;

(b) a person approved by the CAA as being competent to issue such certification, and in accordance with that approval;

(c) a person authorised by the CAA to issue the certificate in a particular case, and in accordance with that authorisation;

(d) in relation only to the adjustment and compensation of direct reading magnetic compasses, the holder of a United Kingdom Airline Transport Pilot's Licence (Aeroplanes) or a Part-FCL Airline Transport Pilot Licence (Aeroplane) or a Flight Navigator's Licence granted or rendered valid under this Order;

* (e) a person approved in accordance with Part 145, and in accordance with that approval; or

(f) the holder of an aircraft maintenance licence granted by the CAA under Part 66, in accordance with the privileges endorsed on the licence.

(2) The holder of an aircraft maintenance engineer's licence or authorisation as an aircraft maintenance engineer granted or issued by or under the law of any Contracting State other than the United Kingdom may issue a certificate of release to service for an aircraft registered in the United Kingdom if:

(a) it is issued in accordance with the privileges endorsed on the licence or authorisation;

(b) the overhaul, repair, replacement, modification, maintenance or inspection has been carried out in the Contracting State under the law of which the licence or authorisation has been granted or issued;

(c) there is a certificate of airworthiness for the aircraft; and

(d) the aircraft has a maximum total weight authorised of not more than 2730kg.

(3) In this article, in relation to a compass, the expression 'repair' includes its adjustment and compensation and the expression 'repaired' is to be construed accordingly.

Requirement for a certificate of release to service for EASA aircraft

32 An EASA aircraft must not fly when a certificate of release to service is required by or under Part M or Part 145 unless such a certificate has been issued in accordance with Part M or Part 145 and is in force.

Licensing of maintenance engineers

33 (1) The CAA must grant an aircraft maintenance engineer's licence, subject to such conditions as it thinks fit, if it is satisfied that the applicant is:

(a) a fit person to hold the licence; and

(b) qualified by having the knowledge, experience, competence and skill in aeronautical engineering to act in the capacity to which the licence relates.

(2) For the purposes of paragraph (1) the applicant must supply such evidence and undergo such examinations and tests as the CAA may require.

(3) An aircraft maintenance engineer's licence authorises the holder to issue:

(a) certificates of maintenance review for such aircraft as may be specified;

* SI 2012/1751

(b) certificates of release to service under this Order for such overhauls, repairs, replacements, modifications, maintenance and inspections of such aircraft and such equipment as may be specified; or

(c) certificates of fitness for flight issued under paragraph 5 of the A Conditions for such aircraft as may be specified.

(4) Subject to article 228, an aircraft maintenance engineer's licence remains in force for the period specified in the licence, which must not exceed five years.

(5) An aircraft maintenance engineer's licence may be renewed by the CAA if it is satisfied that the applicant is a fit person and is qualified in accordance with paragraph (1).

(6) The CAA may issue a certificate rendering valid for the purposes of this Order any aircraft maintenance engineer's licence granted under the law of any country other than the United Kingdom.

(7) An aircraft maintenance engineer's licence granted under this article is not valid unless it has been signed by the holder in ink or indelible pencil but if the licence is annexed to an aircraft maintenance licence issued under Part 66 it is sufficient if that Part 66 licence has such a signature.

(8) The holder of an aircraft maintenance engineer's licence granted under paragraph (1) or of an aircraft maintenance licence granted under Part 66 must not exercise the privileges of such a licence if the holder knows or suspects that the holder's physical or mental condition renders the holder unfit to exercise such privileges.

(9) The CAA may, for the purposes of this article:

(a) approve any course of training or instruction;

(b) authorise a person to conduct such examinations or tests as it may specify; and

(c) approve a person to provide or conduct any course of training or instruction.

Aircraft, engine and propeller log books for non-EASA aircraft

34 (1) In addition to any other log books required to be kept or under this Order, the following log books must be kept for non-EASA aircraft registered in the United Kingdom:

(a) an aircraft log book;

(b) a separate log book for each engine fitted in the aircraft; and

(c) a separate log book for each variable pitch propeller fitted to the aircraft.

(2) The log books must include the information specified in Schedule 6 and in the case of an aircraft having a maximum total weight authorised of not more than 2730kg must be of a type approved by the CAA.

(3) With the exception of an entry of the type referred to in paragraph 3(d)(ii) or 4(d)(ii) of Schedule 6 each entry in the log book:

(a) must be made as soon as practicable after the occurrence to which it relates, but in no event more than 7 days after the expiration of the certificate of maintenance review (if any) in force for the aircraft at the time of the occurrence;

(b) must be made on each occasion that any overhaul, repair, replacement, modification, maintenance or inspection is undertaken on the engine or propeller.

(4) Any document which is incorporated by reference in a log book is deemed, for the purposes of this Order, to be part of the log book.

(5) It is the duty of the operator of every aircraft for which log books are required to be kept to keep them or cause them to be kept in accordance with this article.

(6) Subject to article 159 every log book must be preserved by the operator of the aircraft for at least two years after the aircraft, the engine or the variable pitch propeller has been destroyed or has been permanently withdrawn from use.

Aircraft weight schedule

35 (1) Subject to paragraph (2), this article applies to any flying machine or glider for which a certificate of airworthiness issued by the CAA or rendered valid under this Order is in force.

(2) This article does not apply to an EU-OPS aeroplane.

(3) Every aircraft to which this article applies must be weighed, and the position of its centre of gravity determined, at such times and in such manner as the CAA may require.

(4) When the aircraft is weighed its operator must prepare a weight schedule showing:

(a) either the basic weight, or such other weight as may be approved by the CAA or EASA for that aircraft; and

(b) either the position of the centre of gravity at its basic weight or such other position of the centre of gravity as may be approved by the CAA or EASA for that aircraft.

(5) Subject to article 159, the weight schedule must be preserved by the operator of the aircraft for at least six months after the next occasion on which the aircraft is weighed for the purposes of this article.

(6) In this article "basic weight" means the empty weight of the aircraft established in accordance with the type certification basis of the aircraft.

Access and inspection for airworthiness purposes

36 (1) The CAA may cause such inspections, investigations, tests, experiments and flight trials to be made as it deems necessary for the purposes of this Part of this Order or for the purposes of Part 21, Part 145 or Part M.

(2) Any person authorised to do so by the CAA may at any reasonable time inspect any part of, or material intended to be incorporated in or used in the manufacture of any part of, an aircraft or its equipment or any documents relating to the aircraft and may for that purpose go onto any aerodrome or enter any aircraft factory.

INTENTIONALLY LEFT BLANK

* PART 3A CONTINUING AIRWORTHINESS OF AIRCRAFT WITH A NON-EXPIRING NATIONAL CERTIFICATE OF AIRWORTHINESS

Requirement for and validity of a national airworthiness review certificate

36A (1) An aircraft with a non-expiring national certificate of airworthiness must not fly unless it has a valid national airworthiness review certificate.

(2) Subject to articles 19, 36B, 36H, 36I, 36J and 228, a national airworthiness review certificate is valid for one year.

Validity of the national airworthiness review certificate

36B A national airworthiness review certificate becomes invalid if:

(a) suspended or revoked;

(b) the certificate of airworthiness is suspended or revoked; or

(c) the aircraft ceases to be registered in the United Kingdom.

Other circumstances in which an aircraft must not fly

36C An aircraft with a non-expiring national certificate of airworthiness must not fly if:

(a) the continuing airworthiness of the aircraft or any component fitted to the aircraft does not meet the requirements of this Part;

(b) the aircraft does not remain in conformity with the type design approved by the CAA;

(c) the aircraft has been operated beyond the limitations of the approved flight manual or the airworthiness certificate, without subsequent appropriate action to restore airworthiness being taken;

(d) the aircraft has been involved in an accident or incident that affects the airworthiness of the aircraft, without subsequent appropriate action to restore airworthiness being taken; or

(e) the aircraft has a modification or repair for which a certificate or release to service has not been issued in accordance with this Order.

Initial issue of national airworthiness review certificate

36D (1) This article applies to an aircraft with a non-expiring national certificate of airworthiness which has not previously had a national airworthiness review certificate.

(2) A national airworthiness review certificate is issued for an aircraft to which this article applies in accordance with paragraph (3) or (4).

(3) A national airworthiness review certificate may be issued by the CAA following the satisfactory completion of an airworthiness review by the CAA.

(4) A national airworthiness review certificate may be issued by the CAA on receipt of a recommendation from:

(a) a continuing airworthiness management organisation approved in accordance with article 36M; or

(b) in the case of an aeroplane or a helicopter with a maximum total weight authorised of 2730kg or less, an aeroplane and rotorcraft maintenance organisation approved in accordance with article 36N.

* SI 2012/1751

* (5) A recommendation under paragraph (4) may only be made when the organisation is satisfied that it may properly do so after carrying out an airworthiness review.

Subsequent issue of national airworthiness review certificate

36E (1) This article applies to an aircraft with a non-expiring national certificate of airworthiness which has previously had a national airworthiness review certificate.

(2) A national airworthiness review certificate may be issued for an aircraft to which this article applies in accordance with paragraph (3) or (4).

(3) A national airworthiness review certificate may be issued by the CAA:

(a) following the completion of an airworthiness review by the CAA; or

(b) in the case of an aircraft which has a maximum total weight authorised of 2730kg or less and is neither a commercial air transport aeroplane nor a non-military State aircraft, on receipt of a recommendation for its issue from an aeroplane and rotorcraft maintenance organisation approved in accordance with article 36N.

(4) A national airworthiness review certificate may be issued by a continuing airworthiness management organisation approved under article 36M.

(5) A national airworthiness review certificate may be issued under paragraph (3)(a) or paragraph (4) only when the CAA or the issuing continuing airworthiness management organisation is satisfied that it may properly do so after carrying out an airworthiness review.

(6) A recommendation to issue a national airworthiness review certificate under paragraph (3)(b) may be made only when the organisation making the recommendation is satisfied that it may properly do so after carrying out an airworthiness review.

Aircraft maintenance programme

36F (1) An aircraft with a non-expiring national certificate of airworthiness must be maintained in accordance with an aircraft maintenance programme approved in accordance with this article.

(2) The aircraft maintenance programme and any amendments must be approved:

(a) by the CAA; or

(b) in accordance with paragraphs (3) and (4).

(3) When the continuing airworthiness of the aircraft is managed by a continuing airworthiness management organisation approved in accordance with article 36M, the aircraft maintenance programme and its amendments may be approved by that organisation.

(4) In that case, the approval procedure must be included by the continuing airworthiness management organisation in its continuing airworthiness management exposition required by article 36M(2)(b).

Commercial air transport aeroplanes, public transport aircraft and non-military State aircraft

36G (1) Aircraft with a non-expiring national certificate of airworthiness which are commercial air transport aeroplanes, public transport aircraft or non-military State aircraft must either:

* SI 2012/1751

*

(a) be kept in a controlled environment; or

(a) be managed by a continuing airworthiness management organisation approved in accordance with article 36M; and

(i) have any maintenance carried out in accordance with paragraph (2).

(2) Maintenance is carried out in accordance with this paragraph if:

(a) it is carried out by a maintenance organisation which is approved under article 31(1)(b); or

(b) it is maintenance for which a certificate of release to service may be issued by the holder of a United Kingdom Airline Transport Pilot's Licence (Aeroplanes) or a Flight Navigator's Licence granted or rendered valid under this Order or a Part-FCL Airline Transport Pilot Licence (Aeroplane) and it is carried out by the holder of such a licence.

Extension of a national airworthiness review certificate of an aircraft in a controlled environment

36H (1) The validity of a national airworthiness review certificate of an aircraft in a controlled environment may be extended by the continuing airworthiness management organisation which is managing the airworthiness of the aircraft.

(2) The continuing airworthiness management organisation may extend its validity on a maximum of two occasions, for a period of 12 months on each occasion.

(3) A national airworthiness review certificate may be extended only when the continuing airworthiness management organisation which is to extend it is satisfied that it is proper to do so.

Extension of a national airworthiness review certificate of an aircraft which is not in a controlled environment which has a maximum total weight authorised of 2730kg or less

36I (1) Subject to paragraph (2), this article applies to any aircraft which is not in a controlled environment and which has a maximum total weight authorised of 2730kg or less.

(2) This article does not apply to any commercial air transport aeroplane, public transport aircraft or non-military State aircraft.

(3) The validity of a national airworthiness review certificate of an aircraft to which this article applies may be extended in accordance with paragraphs (4) and (5), on a maximum of two occasions, for a period of 12 months on each occasion.

(4) The national airworthiness review certificate may be extended by:

(a) an appropriately licensed engineer;

(b) a continuing airworthiness management organisation approved in accordance with article 36M; or

(c) an aeroplane and rotorcraft maintenance organisation approved in accordance with article 36N.

(5) A national airworthiness review certificate may be extended only when the person who is to extend it is satisfied that it is proper to do so after carrying out an annual review.

*SI 2012/1751

* **Extension of a national airworthiness review certificate of other aircraft which are not in a controlled environment**

36J (1) This article applies to any aircraft with a non-expiring national certificate of airworthiness which is not in a controlled environment and:

(a) has a maximum total weight authorised of more than 2730kg; or

(b) is a commercial air transport aeroplane, a public transport aircraft or a non-military State aircraft.

(2) The validity of a national airworthiness review certificate of an aircraft to which this article applies may be extended, in accordance with paragraphs (3) and (4), on a maximum of two occasions, for a period of 12 months on each occasion.

(3) The national airworthiness review certificate may be extended by a continuing airworthiness management organisation approved in accordance with article 36M.

(4) A national airworthiness review certificate may be extended only when the organisation which is to extend it is satisfied that it is proper to do so after carrying out an annual review.

Conduct of an airworthiness review

36K (1) An airworthiness review referred to in articles 36D and 36E must be conducted in accordance with this article.

(2) A full documented review of the aircraft records must be carried out to confirm that all scheduled maintenance, overhaul, modification, repair, replacement, defect rectification and compliance with any airworthiness directive issued under article 19, has been completed so as to ensure the continued airworthiness of the aircraft.

(3) A physical survey of the aircraft must be carried out.

(4) For the physical survey, airworthiness review staff who do not hold an appropriate maintenance engineer licence under Part 66 or article 33 must be assisted by such qualified personnel.

(5) Through the physical survey of the aircraft, the staff carrying it out must determine whether:

(a) all required markings and placards are properly installed;

(b) the aircraft complies with its approved flight manual;

(c) the aircraft configuration complies with the approved documentation;

(d) any evident defect can be found that has not been addressed;

(e) the aircraft has completed a satisfactory check flight; and

(f) any inconsistencies can be found between the aircraft and the documented review of records under paragraph (2).

(6) An airworthiness review may be anticipated by a maximum period of 90 days without loss of continuity of the airworthiness review pattern, to allow the physical review to take place during a maintenance check.

(7) Airworthiness review tasks must not be sub-contracted.

* SI 2012/1751

* **Conduct of an annual review**

36L An annual review referred to in articles 36I(5) and 36J(4) means a check to establish that the following has been accomplished:

(a) all maintenance specified in the approved maintenance programme has been carried out in accordance with the programme;

(b) all modifications and inspections deemed mandatory by the CAA have been carried out as required by the CAA;

(c) all defects entered in the aircraft records have been rectified or deferred in accordance with CAA approved procedures; and

(d) all required certificates of release to service have been issued.

Approval of continuing airworthiness management organisation

36M (1) Any person may apply to the CAA for approval as a continuing airworthiness management organisation.

(2) The CAA must approve a person as a continuing airworthiness management organisation for the purposes of this Part if it is satisfied that:

(a) the applicant is competent to exercise the privileges of such an organisation in this Part; and

(b) the applicant has submitted a continuing airworthiness management exposition that satisfies the requirement specified in paragraph (3).

(3) The requirement referred to in paragraph (2)(b) is that the continuing airworthiness management exposition satisfies the requirements in paragraph 4.1 of Chapter A8-25 of CAP 553 entitled British Civil Airworthiness Requirements Section A – Airworthiness Procedures where the CAA has Primary Responsibility for Type Approval of the Product[(a)].

(4) The continuing airworthiness management exposition and any amendments to it must be approved by the CAA.

Approval of aeroplane and rotorcraft maintenance organisation

36N (1) Any person may apply to the CAA for approval as an aeroplane and rotorcraft maintenance organisation.

(2) The CAA must approve a person as an aeroplane and rotorcraft maintenance organisation for the purposes of this Part if it is satisfied that the applicant is competent to exercise the privileges of such an organisation in this Part.

General provisions concerning airworthiness reviews

36O (1) A copy of any national airworthiness review certificate issued or extended for an aircraft must be sent to the CAA within 10 days of the date of its issue or extension.

(2) Should the outcome of the airworthiness review be inconclusive, the person who has carried out the review must inform the CAA and must not issue or extend the certificate without the approval of the CAA.

(3) In this Part, an aircraft in a controlled environment is an aircraft:

(a) CAP 553 (Issue 7) is published by The Stationery Office on behalf of the CAA dated 5th October 2011, ISBN 978 0 11792 581 6.

* SI 2012/1751

*

(a) which, during the previous 12 months has been continuously managed by a continuing airworthiness management organisation approved in accordance with article 36M; and

(b) in respect of which during the previous 12 months any maintenance has been carried out in accordance with paragraph (4).

(4) Maintenance is carried out in accordance with this paragraph if:

(a) it is carried out by a maintenance organisation which is approved under article 31(1)(b); or

(b) it is maintenance for which a certificate of release to service may be issued by the holder of a United Kingdom Airline Transport Pilot's Licence (Aeroplanes) or a Flight Navigator's Licence granted or rendered valid under this Order or a Part-FCL Airline Transport Pilot Licence (Aeroplane) and it is carried out by the holder of such a licence.

(5) Whenever circumstances reveal the existence of a potential safety threat, the CAA must carry out the airworthiness review and issue the national airworthiness review certificate itself.

(6) When the CAA carries out the airworthiness review or issues the national airworthiness review certificate itself, the owner or operator must provide the CAA with:

(a) the documentation required by the CAA;

(b) suitable accommodation at the appropriate location for its personnel; and

(c) when necessary, the support of personnel appropriately qualified in accordance with Part 66 or article 33.

* SI 2012/1751

PART 4 EQUIPMENT OF AIRCRAFT

Equipment of aircraft

37 (1) An aircraft must not fly unless it is so equipped as to comply with the law of the country in which it is registered, and to enable lights and markings to be displayed, and signals to be made, in accordance with this Order and any regulations made under this Order.

(2) Subject to paragraphs (10) and (11), an aircraft registered in the United Kingdom must (in addition to any other equipment required by or under this Order) carry the equipment specified in paragraph 5 of Schedule 4 in the circumstances described in the second column of the Table in paragraph 4 of that Schedule.

(3) The equipment carried must:

(a) comply with the provisions of Schedule 4;

(b) except for the equipment specified in paragraph 3 of the Schedule, be of a type approved by EASA or the CAA either generally or in relation to a class of aircraft or in relation to that aircraft; and

(c) be installed in a manner approved by EASA in the case of an EASA aircraft and the CAA in the case of a non-EASA aircraft.

(4) In any particular case the CAA may direct that an aircraft registered in the United Kingdom must carry such additional or special equipment or supplies as it may specify for the purpose of facilitating the navigation of the aircraft, the carrying out of search and rescue operations or the survival of persons carried in the aircraft.

(5) A direction under paragraph (4) which applies to an EU-OPS aeroplane must be made subject to and in accordance with article 8 of the Technical Harmonisation Regulation.

(6) A direction under paragraph (4) ceases to have effect if:

(i) it is withdrawn by the CAA; or

(ii) it is revoked by the CAA following a finding made in accordance with article 8(1) of the Technical Harmonisation Regulation, that the direction is not justified.

(7) The CAA must revoke a direction if it is found not to be justified under article 8(1) of the Technical Harmonisation Regulation.

(8) This paragraph applies to navigational equipment capable of establishing the aircraft's position in relation to its position at some earlier time by computing and applying the resultant of the acceleration and gravitational forces acting on it.

(9) Navigational equipment to which paragraph (8) applies which is carried in an aircraft registered in the United Kingdom (whether or not in compliance with this Order or any regulations made under this Order) must:

(a) be of a type approved by EASA or the CAA, either generally or in relation to a class of aircraft or in relation to that aircraft; and

(b) be installed in a manner approved by EASA in the case of an EASA aircraft and the CAA in the case of a non-EASA aircraft.

(10) This article does not apply in relation to radio communication and radio navigation equipment except any specified in Schedule 4.

(11) An EU-OPS aeroplane is not required to carry the equipment specified in Schedule 4 if it is:

(a) flying on a commercial air transport flight; or

(b) carrying equipment, other than radio communication and radio navigation equipment, which would be required under EU-OPS if it were flying on a commercial air transport flight.

Carriage and use of equipment

38 (1) The equipment carried in compliance with article 37 must be installed or stowed and kept stowed, maintained and adjusted, so as to be readily accessible and capable of being used by the person for whose use it is intended.

(2) The position of equipment provided for emergency use must be indicated by clear markings in or on the aircraft.

(3) In every public transport aircraft registered in the United Kingdom there must be provided individually for each passenger or, if the CAA so permits in writing, exhibited in a prominent position in every passenger compartment, a notice which complies with paragraph (4).

(4) A notice complies with this paragraph if it is relevant to the aircraft in question and contains pictorial:

(a) instructions on the brace position to be adopted in the event of an emergency landing;

(b) instructions on the method of use of the safety belts and safety harnesses as appropriate;

(c) information as to where emergency exits are to be found and instructions as to how they are to be used; and

(d) information as to where the lifejackets, escape slides, life rafts and oxygen masks, if required to be provided by article 37(2), are to be found and instructions as to how they are to be used.

(5) All equipment installed or carried in an aircraft, whether or not in compliance with article 37, must be installed or stowed and maintained and adjusted so as not to be a source of danger in itself or to impair the airworthiness of the aircraft or the proper functioning of any equipment or services necessary for the safety of the aircraft.

Radio communication and radio navigation equipment of aircraft

39 (1) An aircraft must not fly unless it is equipped with radio communication and radio navigation equipment which:

(a) complies with the law of the country in which the aircraft is registered or the State of the operator; and

(b) enables communications to be made and the aircraft to be navigated, in accordance with the provisions of this Order and any regulations made under this Order.

(2) Without prejudice to paragraph (1) but subject to paragraph (8), an aircraft must be equipped with radio communication and radio navigation equipment in accordance with Schedule 5.

* SI 2011/2432

(3) In any particular case the CAA may direct that an aircraft registered in the United Kingdom carries such additional or special radio communication or radio navigation equipment as it may specify for the purpose of facilitating the navigation of the aircraft, the carrying out of search and rescue operations or the survival of the persons carried in the aircraft.

(4) A direction under paragraph (3) which applies to an EU-OPS aeroplane must be made subject to and in accordance with article 8 of the Technical Harmonisation Regulation.

(5) A direction under paragraph (3) ceases to have effect if:

(a) it is withdrawn by the CAA; or

(b) it is revoked by the CAA following a finding made in accordance with article 8(1) of the Technical Harmonisation Regulation, that the direction is found not to be justified.

(6) The CAA must revoke a direction if it is found not to be justified under article 8(1) of the Technical Harmonisation Regulation.

(7) Subject to article 41 and to any prescribed exceptions, the radio communication and radio navigation equipment provided in compliance with this article in an aircraft registered in the United Kingdom must always be maintained in serviceable condition.

(8) All radio communication and radio navigation equipment installed in an aircraft registered in the United Kingdom or carried on such an aircraft for use in connection with the aircraft (whether or not in compliance with this Order or any regulations made under this Order) must:

(a) be of a type approved by EASA or the CAA in relation to the purpose for which it is to be used; and

(b) except in the case of a non-EASA glider which is permitted by article 3(2) to fly unregistered, be installed in a manner approved by EASA in the case of an EASA aircraft and by the CAA in the case of a non-EASA aircraft.

(9) Neither the radio communication and radio navigation equipment referred to in paragraph (8) nor the manner in which it is installed may be modified except with the approval of EASA in the case of an EASA aircraft or the CAA in the case of a non-EASA aircraft.

(10) An EU-OPS aeroplane is not required to be provided with the radio communication and radio navigation equipment specified in Schedule 5 if it is:

(a) flying on a commercial air transport flight; or

(b) provided with the radio communication and radio navigation equipment which would be required under EU-OPS and article 40 if it were flying on a commercial air transport flight.

Notified radio communication and radio navigation equipment to be carried by EU-OPS aeroplanes

40 An EU-OPS operator must not operate an aeroplane on a commercial air transport flight under the Instrument Flight Rules or under the Visual Flight Rules over routes that cannot be navigated by reference to visual landmarks, unless the aeroplane is equipped with radio communication and navigation equipment in accordance with the notified requirements of air traffic services in the area of operation.

Minimum equipment requirements

41 (1) Subject to paragraph (2), this article applies to any aircraft registered in the United Kingdom.

(2) This article does not apply to an EU-OPS aeroplane where the intended flight is for the purpose of commercial air transport.

(3) The CAA may permit an aircraft or class of aircraft to which this article applies to commence a flight in specified circumstances even though a specified item of equipment which must by or under this Order be carried in the circumstances of the intended flight is not carried or is not in a fit condition for use.

(4) An aircraft must not commence a private flight, an aerial work flight or a public transport flight if any of the equipment which must by or under this Order be carried in the circumstances of the intended flight is not carried or is not in a fit condition for use unless:

(a) the aircraft does so under and in accordance with the terms of a permission granted under paragraph (3) to the operator; and

(b) in the case of an aircraft to which article 83 or 84 applies, the applicable operations manual or police operations manual contains information about that permission.

PART 5 CREW REQUIRED TO BE CARRIED

Required flight crew of aircraft

42 An aircraft must not fly unless it carries a flight crew of the number and description required by the law of the country in which it is registered.

Flight crew required by aircraft registered in the United Kingdom

43 (1) Subject to paragraph (2), this article applies to any aircraft registered in the United Kingdom flying on any flight.

(2) This article does not apply to an EU-OPS aeroplane flying on a commercial air transport flight.

(3) An aircraft to which this article applies must carry a flight crew adequate in number and description to ensure the safety of the aircraft.

(4) An aircraft:

(a) which has a flight manual, must carry a flight crew of at least the number and description specified in that flight manual;

(b) which does not now have a flight manual but has done in the past, must carry a flight crew of at least the number and description specified in that flight manual.

(5) An aircraft which is required by article 39 to be equipped with radio communication equipment must carry a flight radiotelephony operator as a member of the flight crew.

Pilots required on public transport flights by flying machines over 5700kg

44 A flying machine registered in the United Kingdom must carry at least two pilots as members of the flight crew if it:

(a) is flying for the purpose of public transport; and

(b) has a maximum total weight authorised of more than 5700kg.

Pilots required on public transport flights by aeroplanes of 5700kg or less

45 (1) Subject to paragraph (4) an aeroplane registered in the United Kingdom must carry at least two pilots as members of its flight crew if it:

(a) is flying for the purpose of public transport;

(b) has a maximum total weight authorised of 5700kg or less;

(c) is flying in circumstances where the commander is required to comply with the Instrument Flight Rules; and

(d) comes within paragraph (2).

(2) Subject to paragraph (3), an aeroplane comes within this paragraph if it has:

(a) one or more turbine jets;

(b) one or more turbine propeller engines and is provided with a means of pressurising the personnel compartments;

(c) two or more turbine propeller engines and a maximum approved passenger seating configuration of more than nine;

(d) two or more turbine propeller engines and a maximum approved passenger seating configuration of fewer than 10, and is not provided with a means of pressurising the personnel compartments; or

(e) two or more piston engines.

(3) An aeroplane does not come within paragraph (2)(d) or (e) if it is equipped with an autopilot which has been approved by the CAA for the purposes of this article and which is serviceable on take-off.

(4) An aeroplane:

(a) described in paragraph (2)(d) or (e) which is equipped with an approved autopilot is not required to carry two pilots even though before take-off the approved autopilot is found to be unserviceable, if the aeroplane flies in accordance with arrangements approved by the CAA;

(b) described in paragraph (2)(c), (d) or (e) which is flying under and in accordance with the terms of a police air operator's certificate is not required to carry two pilots.

Pilots required on public transport flights by helicopters of 5700kg or less

46 (1) Subject to paragraph (2), a helicopter registered in the United Kingdom must carry at least two pilots as members of its flight crew if it:

(a) is flying for the purpose of public transport;

(b) has a maximum total weight authorised of 5700kg or less; and

(c) is flying in circumstances where the commander is required to comply with the Instrument Flight Rules or is flying at night on a special VFR flight.

(2) A helicopter described in paragraph (1) is not required to carry two pilots if it:

(a) is equipped with an autopilot with altitude hold and heading mode which is serviceable on take-off;

(b) is equipped with such an autopilot even though before take-off the autopilot is found to be unserviceable, if the helicopter flies in accordance with arrangements approved by the CAA; or

(c) is flying by day and remains clear of cloud and with the surface in sight.

Flight navigators or navigational equipment required on public transport flights

47 (1) In the circumstances specified in paragraph (2) an aircraft registered in the United Kingdom flying on a public transport flight must carry:

(a) a flight navigator as a member of the flight crew; or

(b) navigational equipment suitable for the route to be flown.

(2) The circumstances referred to in paragraph (1) are that on the route or on any diversion from it, being a route or diversion planned before take-off, the aircraft is intended to be more than 500 nautical miles from the point of take-off measured along the route to be flown.

(3) A flight navigator carried in compliance with paragraph (1) must be carried in addition to any person who is carried in accordance with this Part to perform other duties.

Required cabin crew of aircraft

48 (1) This article applies to each public transport flight by an aircraft registered in the United Kingdom which has a maximum approved passenger seating configuration of more than 19 and on which at least one passenger is carried.

(2) The crew of the aircraft on each such flight must include cabin crew.

(3) Subject to paragraph (4), on each such flight there must be carried not less than one member of the cabin crew for every 50 or fraction of 50 passenger seats installed in the aircraft.

(4) The number of members of the cabin crew calculated in accordance with paragraph (3) need not be carried if:

(a) the CAA has granted permission to the operator to carry a lesser number on that flight;

(b) the operator carries the number specified in that permission; and

(c) the operator complies with any conditions subject to which the permission is granted.

Power to direct additional crew to be carried

49 (1) Subject to paragraph (2), the CAA may, in the interests of safety, direct the operator of any aircraft registered in the United Kingdom that all or any aircraft operated by him, when flying in circumstances specified in the direction, must carry, in addition to the crew required to be carried by this Part, such additional persons as members of the flight crew or the cabin crew as it may specify in the direction.

(2) The CAA may not issue such a direction to an EU-OPS operator.

INTENTIONALLY LEFT BLANK

PART 6 FLIGHT CREW LICENSING – REQUIREMENT FOR LICENCE

* **Requirement for appropriate licence to act as member of flight crew of EASA aircraft registered in United Kingdom**

50 (1) Subject to paragraph (2), a person must not act as a pilot of an EASA aircraft that is registered in the United Kingdom without holding an appropriate licence granted, converted or rendered valid under the EASA Aircrew Regulation.

(2) A person may act as a pilot of an EASA aircraft without holding an appropriate licence granted, converted or rendered valid under the EASA Aircrew Regulation when undergoing flying training, including solo flying training authorised and supervised by a flight instructor, in accordance with the EASA Aircrew Regulation as amended from time to time.

(3) Subject to the exceptions set out in articles 51, 57 and 59 a person must not act as a flight radiotelephony operator, a flight engineer or a flight navigator of an EASA aircraft that is registered in the United Kingdom without holding an appropriate licence granted or rendered valid under this Order.

Requirement for appropriate licence to act as member of flight crew of non-EASA aircraft registered in the United Kingdom

50A (1) Subject to articles 51 to 60, a person must not act as a member of the flight crew of an aircraft to which this paragraph applies without holding an appropriate licence granted or rendered valid under this Order.

(2) Paragraph (1) applies to any non-EASA aircraft registered in the United Kingdom other than such an aircraft that is referred to in paragraphs (a)(ii), (d) or (h) of Annex II of the Basic EASA Regulation[(a)] and that is flying for the purpose of commercial air transport (an 'excepted aircraft').

(3) A person must not act as a member of the flight crew of an excepted aircraft unless—

(a) the person acts as a flight radiotelephony operator, flight engineer or flight navigator and holds an appropriate licence granted or rendered valid under this Order; or

(b) the person holds an appropriate licence granted, converted or rendered valid under the EASA Aircrew Regulation.

Appropriate licence

50B An appropriate licence for the purposes of this Part and Schedule 7 means a licence which entitles the holder to perform the functions being undertaken in relation to the aircraft concerned on the particular flight.

Flight crew licence requirement – Exception to act as flight radiotelephony operator

51 (1) A person may act as a flight radiotelephony operator within the United Kingdom, the Channel Islands and the Isle of Man without being the holder of an appropriate licence granted or rendered valid under this Order, if the conditions in paragraph (2) apply.

(2) The conditions referred to in paragraph (1) are that the person is:

(a) Namely, historic aircraft having a clear historical reference, related to participation in a noteworthy historical event, a major step in the development of aviation or a major role played in the armed forces of a Member State, aircraft that have been in the service of military forces unless the aircraft is if a type for which a standard has been adopted by EASA and replicas of such aircraft for which the structural design is similar to the original aircraft.

* SI 2012/1751

(a) the pilot of a glider on a private flight and does not communicate by radiotelephony with any air traffic control unit, flight information unit or air/ground communications service unit; or

(b) being trained in an aircraft registered in the United Kingdom to perform duties as a member of the flight crew of an aircraft and is authorised to operate the radiotelephony station by the holder of the licence granted for that station under any enactment.

* **Flight crew licence requirement – Exception for solo flying training in non-EASA aircraft**

52 (1) A person may act as pilot in command of a non-EASA aircraft for the purpose of becoming qualified for the grant or renewal of a pilot's licence or the inclusion or variation of any rating in a pilot's licence within the United Kingdom, the Channel Islands and the Isle of Man, without being the holder of an appropriate licence granted or rendered valid under this Order, if the conditions in paragraph (2) are satisfied.

(2) The conditions referred to in paragraph (1) are that:

* (a) the person is at least 16 years of age unless the aircraft is a balloon or a glider, in which case the person must be at least 14 years of age;

** (b) the person satisfies the requirements of paragraph (3);

(c) deleted;

(d) no other person is carried in the aircraft;

(e) the aircraft is not flying for the purpose of commercial air transport, public transport or aerial work other than aerial work which consists of the giving of instruction in flying or the conducting of flying tests; and

* (f) the person acts in accordance with instructions given by another person holding a pilot's licence granted under this Order or a Part-FCL licence, in each case being a licence which includes a flight instructor rating, a flying instructor's rating or an assistant flying instructor's rating entitling that other person to give instruction in flying the type of aircraft being flown.

**

(3) A person satisfies the requirements of this paragraph if the person—

(a) is the holder of a valid medical certificate issued in accordance with article 72A and complies with any conditions subject to which that certificate was issued;

(b) is the holder of a valid medical certificate issued in accordance with paragraph MED.A.030 of Part-MED and complies with any conditions subject to which that certificate was issued; or

(c) is the holder of a valid medical declaration issued in accordance with article 73A which would be required by virtue of article 73(2) for the person to exercise the privileges of the relevant licence or rating.

* **Flight crew licence requirement – Exception for dual flying training in non-EASA aircraft**

53 (1) A person may act as pilot of a non-EASA aircraft of which the flight crew required to be carried by or under this Order is not more than one pilot for the purpose of becoming qualified for the grant or renewal of a pilot's licence or the inclusion or variation of any rating in a pilot's licence within the United Kingdom, the Channel Islands and the Isle of Man, without being the holder of an appropriate licence granted or rendered valid under this Order, if the conditions in paragraph (2) are satisfied.

(2) The conditions referred to in paragraph (1) are that:

* SI 2012/1751
** SI 2013/3169

(a) the aircraft is not flying for the purpose of commercial air transport, public transport or aerial work other than aerial work which consists of the giving of instruction in flying or the conducting of flying tests;

(b) the person acts in accordance with instructions given by another person holding a pilot's licence granted under this Order or a Part FCL licence, in each case being a licence which includes a flight instructor rating, a flying instructor's rating or an assistant flying instructor's rating entitling that other person to give instruction in flying the type of aircraft being flown; and *

(c) (i) the aircraft is fitted with dual controls and the person is accompanied in the aircraft by the instructor who is seated at the other set of controls; or

(ii) the aircraft is fitted with controls designed for and capable of use by two persons and the person is accompanied in the aircraft by the instructor who is seated so as to be able to use the controls.

Flight crew licence requirement – Exception for non-EASA gyroplanes at night *

54 (1) A person may act as pilot in command of a non-EASA gyroplane at night within the United Kingdom, the Channel Islands and the Isle of Man without being the holder of an appropriate licence granted or rendered valid under this Order if the conditions in paragraph (2) are satisfied.

(2) The conditions referred to in paragraph (1) are that:

(a) the person is the holder of an appropriate licence granted or rendered valid under this Order in all respects save that:

(i) the licence does not include an instrument rating; and

(ii) the person has not within the immediately preceding 13 months carried out as pilot in command at least five take-offs and five landings at a time when the depression of the centre of the sun was not less than 12° below the horizon;

(b) the person so acts in accordance with instructions given by another person holding a pilot's licence granted under this Order or a Part-FCL licence, being a licence which includes a flight instructor rating, a flying instructor's rating or an assistant flying instructor's rating entitling that other person to give instruction in flying the type of gyroplane being flown; *

(c) no person other than the instructor is carried; and

(d) the gyroplane is not flying for the purpose of commercial air transport, public transport or aerial work other than aerial work which consists of the giving of instruction in flying or the conducting of flying tests.

Flight crew licence requirement – Exception for non-EASA balloons *

55 (1) A person may act as pilot in command of a non-EASA balloon within the United Kingdom, the Channel Islands and the Isle of Man, without being the holder of an appropriate licence granted or rendered valid under this Order if the conditions in paragraph (2) are satisfied.

(2) The conditions referred to in paragraph (1) are that:

(a) the person is the holder of an appropriate licence granted or rendered valid under this Order in all respects save that the person has not within the immediately

* SI 2012/1751

preceding 13 months carried out as pilot in command at least five flights each of not less than five minutes duration;

(b) the person acts in accordance with instructions given by a person authorised by the CAA to supervise flying in the type of balloon being flown ("the instructor");

(c) no person is carried other than the instructor, unless the instructor is carried and is the holder of an appropriate licence granted or rendered valid under this Order entitling the instructor to act as pilot in command for the flight; and

(d) the balloon is not flying for the purpose of commercial air transport, public transport or aerial work other than aerial work which consists of the giving of instruction in flying or the conducting of flying tests.

Flight crew licence requirement – Exception for pilot undergoing training or tests in non-EASA aircraft

56 (1) Unless the certificate of airworthiness in force for the aircraft otherwise requires, a person may act as pilot of a non-EASA aircraft registered in the United Kingdom for the purpose of undergoing training or tests for the grant or renewal of a pilot's licence or for the inclusion, renewal or extension of a rating without being the holder of an appropriate licence, if the conditions in paragraph (2) and either paragraph (3) or (4) are satisfied.

(2) The condition first referred to in paragraph (1) is that no other person is carried in the aircraft or in an aircraft which it is towing except:

(a) a person carried as a member of the flight crew in compliance with this Order;

(b) a person authorised by the CAA to witness the training or tests or to conduct the tests; or

(c) if the pilot in command of the aircraft is the holder of an appropriate licence, a person carried for the purpose of being trained or tested as a member of the flight crew of an aircraft.

(3) The conditions secondly referred to in paragraph (1) are that the person acting as the pilot of the aircraft without being the holder of an appropriate licence:

(a) within the preceding six months was serving as a qualified pilot of an aircraft in any of Her Majesty's naval, military or air forces; and

(b) the person's physical condition has not, so far as the person is aware, so deteriorated during that period as to render the person unfit for the licence or rating for which the training or tests are being given or conducted.

(4) The conditions thirdly referred to in paragraph (1) are that the person acting as the pilot of the aircraft without being the holder of an appropriate licence:

(a) holds a Part-FCL licence or a pilot's, a flight navigator's or a flight engineer's licence granted under article 64;

(b) the purpose of the training or tests is to enable that person to qualify under this Order for the grant of a pilot's licence or for the inclusion of an additional type in the aircraft rating in that person's licence; and

(c) the person acts under the supervision of another person who is the holder of an appropriate licence.

* SI 2012/1751

Flight crew licence requirement – Exception for navigators and flight engineers

57 A person may act as a member of the flight crew (otherwise than as a pilot) of an aircraft registered in the United Kingdom without being the holder of an appropriate licence if:

(a) the flight is for the purpose of undergoing training or tests for the grant or renewal of a flight navigator's or a flight engineer's licence or for the inclusion, renewal or extension of a rating in such a licence; and

(b) the person acts under the supervision and in the presence of another person who is the holder of the type of licence or rating for which the person undergoing the training or tests is being trained or tested.

Flight crew licence requirement – Exception for members of HM Forces

58 A person may act as a member of the flight crew of an aircraft registered in the United Kingdom without being the holder of an appropriate licence if, in so doing, the person is acting in the course of his or her duty as a member of any of Her Majesty's naval, military or air forces.

Flight crew licence requirement – Exceptions for gliders

59 (1) A person may act as a member of the flight crew of a glider without being the holder of an appropriate licence if that person acts as a flight radiotelephony operator in accordance with article 51(2)(a).

(2) A person may act as a member of the flight crew of a glider without being the holder of an appropriate licence if the flight is:

(a) a private flight; or

(b) for the purpose of aerial work which consists of instruction or testing in a club environment.

* **Flight crew licence requirement – Exception for non-EASA aircraft where CAA permission granted**

60 (1) Nothing in this Order prohibits the holder of a pilot's licence from acting as pilot of a
* non-EASA aircraft certificated for single pilot operation if the holder is testing any person for the purposes of articles 64(1), (7), 66(2), 67(2), 68 or 69 with the permission of the CAA.

(2) Paragraph (1) applies even though:

(a) the type of aircraft in which the test is conducted is not specified in an aircraft rating included in the licence; or

* (b) the licence or personal flying log does not include a valid certificate of test, experience or revalidation for the type of aircraft.

* **Requirement for appropriate licence to act as member of flight crew of non-EASA aircraft registered elsewhere than in the United Kingdom**

61 (1) Subject to paragraph (2), this article applies to any non-EASA aircraft registered in a country other than the United Kingdom.

(2) This article does not apply to such an aircraft that is referred to in paragraphs (a)(ii), (d) or (h) of Annex II of the Basic EASA Regulation when flying for the purpose of commercial air transport.

* SI 2012/1751

* (3) A person must not act as a member of the flight crew which must by or under this Order be carried in an aircraft to which this article applies unless:

(a) in the case of a non-EASA aircraft flying for the purpose of commercial air transport, public transport or aerial work, that person is the holder of an appropriate licence granted or rendered valid under the law of the country in which the aircraft is registered or the State of the operator; or

(b) in the case of a non-EASA aircraft on a private flight, that person is the holder of an appropriate licence granted or rendered valid under the law of the country in which the aircraft is registered or under this Order and the CAA does not give a direction to the contrary.

Requirement for appropriate licence to act as member of flight crew of EASA aircraft and specified non-EASA aircraft registered elsewhere than in the United Kingdom

61A (1) A person must not act as a member of the flight crew which must by or under the EASA Aircrew Regulation as amended from time to time be carried in:

(a) an EASA aircraft that is registered in a country other than the United Kingdom; or

(b) a non-EASA aircraft that is referred to in paragraphs (a) (ii), (d) or (h) of Annex II of the Basic EASA Regulation that is flying for the purpose of commercial air transport and that is registered in a country other than the United Kingdom,

unless paragraph (2), (3) or (4) applies.

(2) This paragraph applies if the operator of the aircraft is neither resident nor established in the European Union, and the person acting as a member of the flight crew is the holder of an appropriate licence granted or rendered valid under the law of the country in which the aircraft is registered or the State of the operator.

(3) This paragraph applies if the person acting as a member of the flight crew is the holder of an appropriate licence converted, granted or rendered valid under the EASA Aircrew Regulation.

(4) This paragraph applies if the person is acting as a flight radiotelephony operator, a flight engineer or a flight navigator of an aircraft referred to in paragraph (1)(b) and holds an appropriate licence granted or rendered valid under the law of the country in which the aircraft is registered or the State of the operator.

Deeming a non-United Kingdom flight crew licence and any Part-FCL licence valid for non-EASA aircraft and deeming a non-United Kingdom radiotelephony licence valid for any aircraft

62 (1) Subject to paragraph (2), this article applies to any licence which authorises the holder to act as a member of the flight crew of an aircraft and is:

(a) granted under the law of a Contracting State other than the United Kingdom but which is not a Part-FCL licence;

(b) granted under the law of a relevant overseas territory; or

(c) a Part-FCL licence.

(2) This article does not apply to such a licence if it authorises the holder to act as a student pilot only.

* SI 2012/1751

* (3) Subject to paragraph (6), for the purposes of this Part, a licence to which this article applies is, unless the CAA gives a direction to the contrary, deemed to be a licence rendered valid under this Order.

(4) Subject to paragraph (5), the privileges of a licence deemed valid under paragraph (3) are restricted so that it does not entitle the holder:

(a) to act as a member of the flight crew of any aircraft flying for the purpose of commercial air transport, public transport or aerial work or on any flight for which the holder receives remuneration for services as a member of the flight crew; or

(b) to act as pilot of any aircraft flying in controlled airspace in circumstances requiring compliance with the Instrument Flight Rules or to give any instruction in flying.

(5) The restrictions in paragraph (4) do not apply to a flight radiotelephony operator's licence or a Part-FCL licence.

(6) A Part-FCL licence with single-engine piston aeroplane privileges is not deemed to be rendered valid for a microlight aeroplane unless the holder of the licence has undergone differences training in accordance with Section 2 of Part B of Schedule 7, appropriate for a microlight aeroplane class rating.

Permission required where licence does not meet relevant minimum standards

* **63** (1) This article applies to any licence other than a Part-FCL licence endorsed to the effect that the holder does not satisfy in full the relevant minimum standards established under the Chicago Convention.

(2) The holder of such a licence, which has been granted or rendered valid under this Order, must not act as a member of the flight crew of an aircraft registered in the United Kingdom in or over the territory of a Contracting State other than the United Kingdom, except in accordance with a permission granted by the competent authority of that State.

(3) The holder of a licence, which has been granted or rendered valid under the law of a Contracting State other than the United Kingdom, must not act as a member of the flight crew of any aircraft in or over the United Kingdom except in accordance with a permission granted by the CAA, whether or not the licence is rendered valid under this Order.

* SI 2012/1751

INTENTIONALLY LEFT BLANK

PART 7 FLIGHT CREW LICENSING – GRANT OF LICENCE AND MAINTENANCE OF PRIVILEGES

Grant, renewal and privileges of United Kingdom flight crew licences

64 (1) Subject to article 82(1), the CAA must grant licences of any of the classes specified in Part A of Schedule 7, authorising the holder to act as a member of the flight crew of a non-EASA aircraft registered in the United Kingdom, if it is satisfied that the applicant is:

(a) a fit person to hold the licence; and

(b) qualified by having the knowledge, experience, competence, skill and physical and mental fitness to act in the capacity to which the licence relates.

(2) For the purposes of paragraph (1) the applicant must supply such evidence and undergo such assessments, examinations and tests (including in particular medical assessments and examinations) and undertake such courses of training as the CAA may require.

(3) A licence granted under this article is not valid unless it has been signed by the holder in ink or indelible pencil.

(4) Subject to article 228:

(a) a licence granted under this article remains in force for the period indicated in the licence, not exceeding the period specified for a licence of that class in Part A of Schedule 7;

(b) if no period is indicated in the licence, it remains in force for the lifetime of the holder.

(5) A licence granted under this article may be renewed by the CAA on being satisfied that the applicant is a fit person and is qualified in accordance with paragraph (1).

(6) A licence granted under this article must not be granted to any person who is under the minimum age specified for that class of licence in Part A of Schedule 7.

(7) Nothing in this Order obliges the CAA to accept an application for the issue of a National Private Pilot's Licence when the application is not supported by such reports from such persons approved under article 244 as the CAA may specify, either generally or in a particular case or class of cases.

(8) Subject to any conditions of the licence including those specified in Part A of Schedule 7, the other provisions of this Part and article 228, a licence of any class entitles the holder to exercise the privileges specified for that licence in Section 1 of Part A of that Schedule under the heading 'Privileges' or Sections 2 or 3 of Part A of that Schedule under the heading 'Privileges and conditions' on a non-EASA aircraft.

(9) The CAA may grant a licence subject to such conditions as it thinks fit.

Ratings and qualifications

65 (1) Subject to article 82(2), the CAA may include in any United Kingdom licence or JAR-FCL licence any rating or qualification specified in Section 1 of Part B of Schedule 7.

(2) The CAA may include in any United Kingdom licence or National Private Pilot's Licence (Aeroplanes) any rating specified in Section 2 of Part B of Schedule 7.

(2A) The CAA may include in any National Private Pilot's Licence (Helicopters) any rating specified in Section 3 of Part B of Schedule 7.

* SI 2012/1751

(3) The CAA must include a rating or qualification if it is satisfied that the applicant is qualified by having the knowledge, experience, competence, skill and physical and mental fitness to act in the capacity to which the rating or qualification relates.

(4) A rating or qualification is deemed to form part of the licence.

(5) A rating or qualification of any class entitles the holder of the licence in which the rating or qualification is included to exercise the privileges specified for that rating or qualification in Part B of Schedule 7 on a non-EASA aircraft. *

(6) The CAA may grant a rating or qualification subject to such conditions as it thinks fit.

Maintenance of privileges of aircraft ratings specified in Section 1 of Part B of Schedule 7 in United Kingdom pilot licences for balloons, airships, gliders and gyroplanes *

66 (1) This article applies to the following United Kingdom pilot licences:

(a) United Kingdom Private Pilot's Licence (Balloons and Airships);

(b) United Kingdom Commercial Pilot's Licence (Balloons);

(c) United Kingdom Commercial Pilot's Licence (Airships);

(d) United Kingdom Commercial Pilot's Licence (Gliders); and

(e) United Kingdom Private Pilot's Licence (Gyroplanes).

(2) Subject to paragraphs (3) and (4), the holder of such a pilot licence is not entitled to exercise the privileges of an aircraft rating specified in Section 1 of Part B of Schedule 7 which is included in the licence on a flight unless:

(a) the licence has a certificate of test or a certificate of experience for the rating;

(b) the certificate is appropriate to the functions to be performed on that flight in accordance with Section 1 of Part C of Schedule 7; and

(c) the certificate is issued and valid in accordance with Section 1 of Part C of Schedule 7.

(3) The holder of a United Kingdom Private Pilot's Licence (Balloons and Airships) is entitled to exercise the privileges of an aircraft rating specified in Section 1 of Part B of Schedule 7 which is included in the licence on a flight if the licence does not have a certificate referred to in paragraph (2). *

(4) The holder of a United Kingdom Private Pilot's Licence (Gyroplanes) is not entitled to exercise the privileges of an aircraft rating specified in Section 1 of Part B of Schedule 7 which is included in the licence unless the certificate of test or certificate of experience required by paragraph (2) is included in the holder's personal flying log. *

Maintenance of privileges of aircraft ratings specified in Section 1 of Part B of Schedule 7 in United Kingdom aeroplane and helicopter licences *

67 (1) This article applies to United Kingdom aeroplane and helicopter licences:

(2) The holder of a licence to which this article applies is not entitled to exercise the privileges of an aircraft rating specified in Section 1 of Part B of Schedule 7 which is included in the licence on a flight unless:

(a) the licence has a certificate of revalidation for the rating;

(b) the certificate is appropriate, issued and valid in accordance with Section 2 of Part C of Schedule 7;

(c) the holder has undertaken the differences training specified in paragraph FCL.710 of Part-FCL; and *

(d) detailed information about that differences training is entered in the holder's personal flying log. *

* SI 2012/1751

Maintenance of privileges of other ratings specified in Section 1 of Part B of Schedule 7

* **68** (1) The holder of a United Kingdom licence is not entitled to exercise the privileges of a flying instructor's rating (gyroplanes), an assistant flying instructor's rating (gyroplanes) or an instrument meteorological conditions rating (aeroplanes) unless:

(a) the licence in which the rating is included has a certificate of test;

(b) the certificate is appropriate to the functions to which the rating relates in accordance with Section 1 of Part C of Schedule 7; and

(c) the certificate is issued and valid in accordance with Section 1 of Part C of Schedule 7.

* (2) The holder of a United Kingdom licence is not entitled to exercise the privileges of a rating described in paragraph (3) unless:

(a) the licence in which the rating is included has a certificate of revalidation for the rating; and

(b) the certificate is appropriate, issued and valid in accordance with Section 2 of Part C of Schedule 7.

(3) The ratings referred to in paragraph (2) are:

(a) an instrument rating (aeroplane);

(b) an instrument rating (helicopter); and

(c) any instructor's rating other than a flying instructor's rating (gyroplanes) or an assistant flying instructor's rating (gyroplanes).

* **Maintenance of privileges of ratings specified in Sections 2 and 3 of Part B of Schedule 7**

69 (1) Subject to paragraph (2), the holder of a United Kingdom Licence or a National Private Pilot's Licence is not entitled to exercise the privileges of any rating specified in Sections 2 or 3 of Part B of Schedule 7 which is included in the licence unless:

(a) the licence includes a certificate of revalidation for the rating; and

(b) the certificate is issued and valid in accordance with Section 3 of Part C of Schedule 7.

(2) The holder of a United Kingdom Private Pilot's Licence (Aeroplanes) may exercise the privileges of a microlight aeroplane class rating included in the licence if the following conditions are satisfied:

(a) the rating was granted before 1st February 2008;

(b) there is included in the holder's personal flying log a certificate of test or a certificate of experience which is appropriate to the functions to be performed on the flight in accordance with Case A of Section 1 of Part C of Schedule 7; and

(c) the certificate is issued and valid in accordance with Section 1 of Part C of Schedule 7.

Maintenance of privileges of Flight Engineers' Licences

70 The holder of a United Kingdom Flight Engineer's Licence is not entitled to exercise the privileges of an aircraft rating contained in the licence on a flight unless:

(a) the licence has a certificate of revalidation for the rating; and

(b) the certificate is appropriate, issued and valid in accordance with Section 2 of Part C of Schedule 7.

* SI 2012/1751

Maintenance of privileges of Flight Navigators' Licences

* **71** The holder of a United Kingdom Flight Navigator's Licence is not entitled to exercise the privileges of the licence on a flight to which article 47 applies unless:

(a) the licence has a certificate of experience;

(b) the certificate is appropriate to the functions to be performed on that flight in accordance with Section 1 of Part C of Schedule 7; and

(c) the certificate is issued and valid in accordance with Section 1 of Part C of Schedule 7.

* **Requirement for a medical certificate for a United Kingdom licence and a National Private Pilot's Licence (Helicopters)**

72 (1) This article applies to any licence granted under article 64, other than:

(a) a National Private Pilot's Licence (Aeroplanes);

(b) a United Kingdom Private Pilot's Licence (Gyroplanes);

(c) a United Kingdom Private Pilot's Licence (Balloons and Airships);

(d) a United Kingdom Commercial Pilot's Licence (Balloons) that is restricted to aerial work and to the privileges of a United Kingdom Private Pilot's Licence (Balloons and Airships); and

(e) a United Kingdom Flight Radiotelephony Operator's Licence.

(2) The holder of a licence to which this article applies, other than a National Private Pilot's Licence (Helicopters), is not entitled to perform any of the functions to which the licence relates unless the licence includes a valid medical certificate issued under article 72A or the holder of the licence has a valid medical certificate issued under Part-MED that is not a Light Aircraft Pilot Licence medical certificate.

(3) The holder of a National Private Pilot's Licence (Helicopters) is not entitled to exercise any of the privileges of the licence unless the holder has a medical certificate of a type described in paragraph (2) or a medical certificate granted under Part-MED that is valid for a Light Aircraft Pilot Licence issued under Part-FCL.

Issue and validity of a medical certificate for a United Kingdom licence and a National Private Pilot's Licence (Helicopters)

72A (1) The CAA may approve a person to carry out a medical assessment or examination for the purposes of this article and to issue a medical certificate in accordance with paragraph (6).

(2) An approval may be granted generally or in a particular case or class of cases.

(3) Every applicant for, or holder of, a licence to which article 72 applies must, whenever the CAA requires, submit to a medical assessment or examination by a person approved by the CAA.

(4) The approved person must make a report of the assessment or examination to the CAA in such form as the CAA may require.

(5) On the basis of such medical assessment or examination, the approved person must assess whether the applicant for or holder of the licence meets the requirements specified by the CAA.

* SI 2012/1751

* (6) If the approved person assesses the applicant for or holder of the licence as meeting the requirements specified by the CAA, the approved person must issue a certificate to that effect.

(7) Subject to articles 74(3) and 228, a medical certificate is valid for the period specified in the certificate.

(8) A medical certificate forms part of the licence.

Requirement for a Part MED medical certificate for a Part-FCL licence

72B The holder of a Part-FCL licence is not entitled to exercise any of the privileges of the licence unless the holder has a valid medical certificate in accordance with paragraph MED.A.030 of Part-MED.

Requirement for a medical declaration

73 (1) Paragraph 2 applies to the following licences granted under article 64:

(a) a National Private Pilot's Licence (Aeroplanes);

(b) a United Kingdom Private Pilot's Licence (Gyroplanes);

(c) a United Kingdom Private Pilot's Licence (Balloons and Airships); and

(d) a United Kingdom Commercial Pilot's Licence (Balloons) that is restricted to aerial work and to the privileges of a United Kingdom Private Pilot's Licence (Balloons and Airships).

(2) The holder of a licence to which this article applies is not entitled to exercise any of the privileges of the licence unless the holder has:

(a) a medical certificate issued under article 72A;

(b) a valid medical declaration issued under article 73A; or

(c) a medical certificate granted under Section 2 of Subpart A of Part-MED that is valid for a Light Aircraft Pilot Licence issued under Part-FCL.

Issue and validity of a medical declaration

73A (1) A medical declaration is valid if it is issued in accordance with paragraph (2) and the validity period specified in paragraph (3) or (4) has not expired.

(2) A medical declaration is issued in accordance with this paragraph if:

(a) the applicant has signed a statement of belief in the declaration that the applicant meets the medical requirements to fly, having regard to the standards specified by the CAA in the declaration;

(b) the applicant reasonably holds that belief;

(c) the applicant's general medical practitioner or, if the applicant is a member of Her Majesty's naval, military or air forces, a Medical Officer of those forces who is included in the General Practitioner Register maintained by the General Medical Council, is authorised to review the applicant's medical records; and

(d) the applicant's general medical practitioner or Medical Officer has signed a statement in the declaration that, having seen those medical records, the general medical practitioner or Medical Officer is satisfied that there is nothing in the pilot's medical history which prevents the pilot from meeting the medical standards specified in the declaration.

* SI 2012/1751

* (3) Subject to paragraph (4), the validity period of a medical declaration commences on the date it is signed by the general medical practitioner or Medical Officer and is as specified in the table in paragraph (4).

(4) If a new medical declaration is signed when the applicant already holds a current medical declaration which expires within the next 45 days, the validity period of the new medical declaration commences on the date on which the current medical declaration expires and is as specified in the following table.

Period of validity of medical declaration

Age of holder at date of signature of medical declaration	**Medical declaration validity period**
Under 45	Until the holder's 45th birthday or 5 years whichever is longer
45 to 59	5 years
60 to 64	Until the holder's 65th birthday or 1 year whichever is longer
65 or over	1 year

Issue of Light Aircraft Pilot Licence medical certificates

73B (1) This article establishes the requirements under paragraph MED.D.035(a)(2) of Part-MED for a general medical practitioner to act as an authorised aeromedical examiner for the purpose of the issue, revalidation or renewal of Light Aircraft Pilot Licence medical certificates in accordance with Part-MED.

(2) The requirements referred to in paragraph (1) are that the general medical practitioner must:

(a) be in general practice or be a Medical Officer of Her Majesty's naval, military or air forces who is included in the General Practitioner Register maintained by the General Medical Council;

(b) hold a valid licence to practise medicine from the General Medical Council; and

(c) have access to and be able to consult the medical records of the applicant.

(3) A general medical practitioner who issues a Light Aircraft Pilot Licence medical certificate must, in relation to that certificate, keep for a period of 10 years after the expiry of the certificate:

(a) the signed and completed Light Aircraft Pilot Licence medical application form;

(b) a copy of the completed assessment or examination forms; and

(c) a copy of the medical certificate.

Occupational health medical practitioners

73C For the purposes of paragraph MED.D.040(b) of Part-MED an 'occupational health medical practitioner' is any doctor listed in the Specialist Register of the General Medical Council as having specialist registration in occupational medicine.

* SI 2012/1751

Licence holder not to act as member of flight crew when unfit

74 (1) A person must not act as a member of the flight crew of an aircraft registered in the United Kingdom if they know or suspect their physical or mental condition renders them temporarily or permanently unfit to perform such functions or to act in such capacity.

(2) Every holder of a medical certificate issued under article 72 who:

(a) suffers any personal injury involving incapacity to undertake the holder's functions as a member of the flight crew;

* (b) suffers any significant illness involving incapacity to undertake those functions throughout a period of 21 days or more; or

(c) in the case of a woman, has reason to believe that she is pregnant,

* must inform an aeromedical examiner authorised by the CAA of such injury, illness or pregnancy, as soon as possible in the case of injury or pregnancy, and as soon as the period of 21 days has expired in the case of illness.

(3) The medical certificate is suspended upon the occurrence of such injury or the expiry of such period of illness or the confirmation of the pregnancy.

(4) In the case of injury or illness the suspension ceases upon the holder being medically
* assessed under arrangements made by the CAA and pronounced fit to resume the holder's functions as a member of the flight crew or upon the CAA exempting, subject to such conditions as it thinks fit, the holder from the requirement of a medical
* assessment.

(5) In the case of pregnancy, the suspension may be lifted by the CAA or an aeromedical examiner authorised by the CAA for such period and subject to such conditions as the CAA or the aeromedical examiner thinks fit and ceases upon the holder being medically assessed under arrangements made by the CAA after the pregnancy has ended and pronounced fit to resume her functions as a member of the flight crew.

Training for landing on or taking off from water

* **75** A person must not act as pilot in command of a non-EASA aircraft which takes off from or lands on water unless appropriate training has been completed and recorded in the
* pilot's personal flying log.

* SI 2012/1751

INTENTIONALLY LEFT BLANK

PART 8 FLIGHT CREW LICENSING – GENERAL PROVISIONS

Person not to fly after failing test

76 The holder of a licence who, on the last occasion when the holder took a test for the purposes of articles 66, 67, 68, 69, 70 or 71 failed that test, is not entitled to fly in the capacity for which that test would have qualified the holder had it been passed.

Approval of training and testing

77 The CAA may, for the purposes of Part 7:

(a) approve any course of training or instruction;

(b) authorise a person to conduct such examinations or tests as it may specify; and

(c) approve a person to provide any course of training or instruction.

Validation of licences

* **78** Except for a Part-FCL licence the CAA may issue a certificate of validation rendering valid for the purposes of this Order any flight crew licence granted under the law of any country other than that of the United Kingdom.

Personal flying log

79 (1) Every member of the flight crew of an aircraft registered in the United Kingdom and every person who engages in flying for the purpose of qualifying for the grant or renewal
* of a flight crew licence under this Order or a flight crew licence issued by the CAA under Part-FCL must keep a personal flying log in which the following information must be recorded:

* (a) the name and address of the holder of the log;

(b) detailed information about the holder's licence (if any) to act as a member of the flight crew of an aircraft; and

(c) the name and address of the holder's employer (if any).

* (2) Detailed information about each flight during which the holder of the log acted either as a member of the flight crew of an aircraft or for the purpose of qualifying for the grant
* or renewal of a licence under this Order must be recorded in the log as soon as reasonably practicable after the end of each flight.

(3) The information recorded in accordance with paragraph (2) must include:

* (a) the date, the places at which the holder of the log embarked on and disembarked from the aircraft and the time spent during the course of a flight when the holder was acting in either capacity;

(b) the type and registration marks of the aircraft;

(c) the capacity in which the holder acted in flight;

(d) information about any special conditions under which the flight was conducted, including night flying and instrument flying; and

* (e) information about any test or examination undertaken by the holder of the log whilst in flight.

(4) Information about any test or examination undertaken whilst in a flight simulator must
* be recorded in the log, including:

(a) the date of the test or examination;

* SI 2012/1751

(b) the type of simulator;

(c) the capacity in which the holder acted; and

(d) the nature of the test or examination.

** (5) For the purposes of this article, a helicopter is in flight from the moment the helicopter's rotor blades start turning until the moment the helicopter comes to rest at the end of the flight and the rotor blades are stopped.

Instruction in flying

80 (1) This article applies to instruction in flying given to any person flying or about to fly a flying machine or glider for the purpose of becoming qualified for:

(a) the grant of a pilot's licence; or

(b) the inclusion or variation of any rating or qualification in a pilot's licence.

(2) A person must not give any instruction in flying to which this article applies unless:

* (a) they hold a licence, granted or rendered valid under this Order or a Part-FCL licence, entitling them to act as pilot in command of the aircraft for the purpose and in the circumstances under which the instruction is to be given; and

* (b) the licence includes an instructor's rating entitling the holder to give the instruction or the holder of the licence holds a valid instructor's certificate granted under Part-FCL which entitles the holder to give the instruction.

Glider pilots – minimum age

81 A person under 14 years of age must not act as pilot in command of a non-EASA glider.

Licences and ratings no longer to be granted

82 (1) The CAA must not grant:

* (a) a United Kingdom Commercial Pilot's Licence (Helicopters and Gyroplanes); or

(b) a United Kingdom Airline Transport Pilot's Licence (Helicopters and Gyroplanes),

to any person who was not on 31st December 2002 the holder of such a licence.

(2) The CAA must not grant a flying instructor's rating (aeroplanes), an assistant flying instructor's rating (aeroplanes), a flying instructor's rating (helicopters) or an assistant flying instructor's rating (helicopters).

* **Status of licences issued by the CAA**

82A (1) This article applies to pilot licences issued by the CAA prior to 17th September 2012 that were not entitled to be mutually recognised by the JAA Full Member States in accordance with JAR-FCL 1 or JAR-FCL 2.

(2) The following have effect:

(a) any United Kingdom Basic Commercial Pilot's Licence (Aeroplanes) that includes a restriction specified in paragraph (3) is deemed to be a United Kingdom Private Pilot's Licence (Aeroplanes);

(b) any United Kingdom Basic Commercial Pilot's Licence (Aeroplanes), other than a licence referred to in sub-paragraph (a), is deemed to be a United Kingdom Commercial Pilot's Licence (Aeroplanes);

* SI 2012/1751
** SI 2013/3169

(c) any JAA Commercial Pilot Licence (Aeroplane) that is endorsed to the effect that the licence does not fully comply with JAR-FCL is deemed to be a United Kingdom Commercial Pilot's Licence (Aeroplanes);

(d) any JAA Airline Transport Pilot Licence (Aeroplane) that is endorsed to the effect that the licence does not fully comply with JAR-FCL is deemed to be a United Kingdom Airline Transport Pilot's Licence (Aeroplanes); and

(e) any JAA Commercial Pilot Licence (Helicopter) that is endorsed to the effect that the licence does not fully comply with JAR-FCL is deemed to be a United Kingdom Commercial Pilot's Licence (Helicopters).

(3) A restriction referred to in paragraph (2)(a) is a restriction that the holder must not fly as pilot in command or co-pilot for the purposes of public transport or aerial work, apart from aerial work for:

(a) the giving of instruction in flying;

(b) the conducting of flying tests for the purpose of this Order;

(c) the towing of a glider in flight;

(d) the giving of flying displays; or

(e) parachute dropping.

* SI 2012/1751

INTENTIONALLY LEFT BLANK

PART 9 REQUIREMENT FOR OPERATIONS AND TRAINING MANUALS

Operations manual

83 (1) Subject to paragraphs (2) and (3), this article applies to public transport aircraft registered in the United Kingdom.

(2) This article does not apply to an aircraft used for the time being solely for flights not intended to exceed 60 minutes in duration, which are either:

(a) flights solely for training persons to perform duties in an aircraft; or

(b) flights intended to begin and end at the same aerodrome.

(3) This article does not apply to an aircraft flying, or intended by the operator of the aircraft to fly, solely under and in accordance with the terms of a police air operator's certificate.

(4) An operator of an aircraft to which this article applies must:

(a) make available to each member of the operating staff an operations manual which complies with paragraph (5);

(b) ensure that each copy of the operations manual is kept up to date; and

(c) ensure that on each flight every member of the crew has access to a copy of every part of the operations manual which is relevant to the crew member's duties on the flight.

(5) An operations manual:

(a) complies with this paragraph if, subject to sub-paragraph (b), it contains all information and instructions necessary to enable the operating staff to perform their duties as such including in particular information and instructions relating to the matters specified in Part A of Schedule 8;

(b) is not required to contain any information or instructions available in a flight manual accessible to the persons by whom the information or instructions may be required.

(6) An aircraft to which this article applies must not fly unless, at least 30 days before such flight, the operator of the aircraft has supplied to the CAA a copy of the whole of the operations manual in effect for the aircraft.

(7) Any amendments or additions to the operations manual must be supplied to the CAA by the operator before or immediately after they come into effect.

(8) If an amendment or addition relates to the operation of an aircraft to which the operations manual did not previously apply, that aircraft must not fly for the purpose of public transport until the amendment or addition has been supplied to the CAA.

(9) The operator must make such amendments or additions to the operations manual as the CAA may require for the purpose of ensuring the safety of the aircraft, or of persons or property carried in it, or for the safety, efficiency or regularity of air navigation.

Police operations manual

84 (1) This article applies to an aircraft flying, or intended by the operator of the aircraft to fly, solely under and in accordance with the terms of a police air operator's certificate.

(2) An aircraft to which this article applies must not fly except under and in accordance with the terms of Part 1 and Part 2 of a police operations manual, Part 1 of which must have been approved for the aircraft by the CAA.

(3) The operator of every aircraft to which this article applies must:

(a) make available to each member of its operating staff a police operations manual which complies with paragraph (4);

(b) ensure that each copy of the operations manual is kept up to date; and

(c) ensure that on each flight every member of the crew has access to a copy of every part of the operations manual which is relevant to the crew member's duties on the flight.

(4) A police operations manual complies with this paragraph if it contains all information and instructions necessary to enable the operating staff to perform their duties as such.

(5) An aircraft to which this article applies must not fly unless, at least 30 days before such flight, the operator of the aircraft has supplied to the CAA a copy of Part 2 of the police operations manual in effect for the aircraft.

(6) Any amendments or additions to Part 2 of the police operations manual must be supplied to the CAA by the operator before or immediately after they come into effect.

(7) If an amendment or addition relates to the operation of an aircraft to which the police operations manual did not previously apply, that aircraft must not fly in the service of a police authority under and in accordance with the terms of the police operator's certificate until the amendment or addition has been supplied to the CAA.

(8) The operator must make such amendments or additions to the police operations manual as the CAA may require for the purpose of ensuring the safety of the aircraft, or of persons or property carried in it, or for the safety, efficiency or regularity of air navigation.

Training manual

85 (1) Subject to paragraph (2), this article applies to public transport aircraft registered in the United Kingdom.

(2) This article does not apply to aircraft flying, or intended by the operator of the aircraft to fly, solely under and in accordance with the terms of a police air operator's certificate.

(3) The operator of every aircraft to which this article applies must:

(a) make available to every person appointed by the operator to give or to supervise the training, experience, practice or periodical tests required under article 95(2) a training manual which complies with paragraph (4); and

(b) ensure that each copy of that training manual is kept up to date.

(4) A training manual complies with this paragraph if it contains all information and instructions necessary to enable a person appointed by the operator to give or to supervise the training, experience, practice and periodical tests required under article 95(2) to perform that person's duties, including in particular information and instructions relating to the matters specified in Part B of Schedule 8.

(5) An aircraft to which this article applies must not fly unless at least 30 days before such flight the operator of the aircraft has supplied to the CAA a copy of the whole of the training manual relating to the crew of that aircraft.

(6) Any amendments or additions to the training manual must be supplied to the CAA by the operator before or immediately after they come into effect.

(7) If an amendment or addition relates to training, experience, practice or periodical tests on an aircraft to which the training manual did not previously apply, that aircraft must not fly for the purpose of public transport until the amendment or addition has been supplied to the CAA.

(8) The operator must make such amendments or additions to the training manual as the CAA may require for the purpose of ensuring the safety of the aircraft, or of persons or property carried in it, or for the safety, efficiency or regularity of air navigation.

INTENTIONALLY LEFT BLANK

PART 10 DUTIES OF COMMANDER

Pre-flight action by commander of aircraft other than EU-OPS aeroplanes

86 (1) This article applies to the commander of any aircraft except for the commander of an EU-OPS aeroplane intending to commence a commercial air transport flight.

(2) A commander must, before taking off on a private flight, an aerial work flight or a public transport flight, take all reasonable steps so as to be satisfied of the matters specified in paragraph (3).

(3) The matters referred to in paragraph (2) are that:

(a) the flight can safely be made, taking into account the latest information available as to the route and aerodrome to be used, the weather reports and forecasts available and any alternative course of action which can be adopted in case the flight cannot be completed as planned;

(b) either:

(i) the equipment which must by or under this Order be carried in the circumstances of the intended flight is carried and is in a fit condition for use; or

(ii) the flight may commence under and in accordance with the terms of a permission granted to the operator under article 41(3);

(c) the aircraft is in every way fit for the intended flight, and that where a certificate of maintenance review is required by article 25(2) to be in force, it is in force and will not cease to be in force during the intended flight;

(d) the load carried by the aircraft is of such weight, and is so distributed and secured, that it may safely be carried on the intended flight;

(e) in the case of a flying machine or airship:

(i) sufficient fuel, oil and engine coolant (if required) are carried for the intended flight, and that a safe margin has been allowed for contingencies; and

(ii) in the case of a public transport flight, the instructions in the operations manual relating to fuel, oil and engine coolant have been complied with;

(f) in the case of an airship or balloon, sufficient ballast is carried for the intended flight;

(g) any pre-flight check system established by the operator and set out in the operations manual or elsewhere has been complied with by each member of the crew of the aircraft; and

(h) in the case of a balloon, the balloon will be able to land clear of any congested area.

Commander to be satisfied that flight can be safely completed

87 The commander of a flying machine must, before take-off, take all reasonable steps so as to be satisfied that it is capable of safely taking off, reaching and maintaining a safe height and making a safe landing at the place of intended destination having regard to:

(a) the performance of the flying machine in the conditions to be expected on the intended flight; and

(b) any obstructions at the places of departure and intended destination and on the intended route.

Passenger briefing by commander

88 (1) Subject to paragraph (3), the commander of an aircraft registered in the United Kingdom must take all reasonable steps to ensure that before take-off on any flight, all passengers are made familiar with the position and method of use of:

(a) emergency exits;

(b) safety belts (with diagonal shoulder strap where required to be carried);

(c) safety harnesses (if required to be carried);

(d) oxygen equipment, lifejackets and the floor path lighting system (where required to be carried); and

(e) all other devices required by or under this Order and intended for use by passengers individually in the case of an emergency occurring to the aircraft.

(2) Subject to paragraph (3), the commander of an aircraft registered in the United Kingdom must also take all reasonable steps to ensure that in an emergency during a flight, all passengers are instructed in the emergency action which they should take.

(3) This article does not apply to the commander of:

(a) an aircraft registered in the United Kingdom in relation to a flight under and in accordance with the terms of a police air operator's certificate; or

(b) an EU-OPS aeroplane in relation to a commercial air transport flight.

Public transport of passengers – commander to ensure demonstration of lifejackets

89 (1) Subject to paragraph (2), this article applies to a flight for the purpose of the public transport of passengers by an aircraft registered in the United Kingdom.

(2) This article does not apply to a flight under and in accordance with the terms of a police air operator's certificate.

(3) Subject to paragraph (5), in the case of a flight in an aircraft which is not a seaplane and on which it is intended to reach a point more than 30 minutes flying time from the nearest land, the commander must take all reasonable steps to ensure that before take-off all passengers are given a demonstration of the method of use of the lifejackets required by or under this Order for the use of passengers.

(4) Subject to paragraph (6) and if the circumstances described in paragraph (5) apply, in the case of an aircraft which is not a seaplane and which is required by article 48(2) to carry cabin crew, the commander must take all reasonable steps to ensure that before take-off all passengers are given a demonstration of the method of use of the lifejackets required by or under this Order for the use of passengers.

(5) The circumstances referred to in paragraph (4) are that:

(a) it is intended to proceed beyond gliding distance from land; or

(b) in the event of any emergency occurring during the take-off or during the landing at the intended destination or any likely alternate destination it is reasonably possible that the aircraft would be forced to land onto water.

(6) If the requirement to give a demonstration required by paragraph (3) or (4) arises only because it is reasonably possible that the aircraft would be forced to land onto water at one or more of the likely alternate destinations the demonstration need not be given until after the decision has been taken to divert to such a destination.

(7) In the case of an aircraft which is a seaplane, the commander must take all reasonable steps to ensure that before take-off all passengers are given a demonstration of the method of use of the lifejackets required by or under this Order for the use of passengers.

(8) In this article, flying time is calculated by reference to the speed specified in the relevant certificate of airworthiness or flight manual as the speed for compliance with regulations governing flights over water while flying in still air.

Public transport of passengers – commander to ensure crew, passengers and baggage secure

90 (1) Subject to paragraph (2), this article applies to a flight for the purpose of the public transport of passengers by an aircraft registered in the United Kingdom.

(2) This article does not apply to a flight under and in accordance with the terms of a police air operator's certificate.

(3) Before the aircraft takes off and before it lands, the commander must take all reasonable steps to ensure that:

(a) the crew of the aircraft are properly secured in their seats; and

(b) any cabin crew carried in compliance with article 48(2) are properly secured in seats which are in a passenger compartment and which are so situated that the cabin crew can readily assist passengers.

(4) During the period and in the circumstances described in paragraph (5) the commander must take all reasonable steps to ensure that:

(a) all passengers of two years of age or more are properly secured in their seats by safety belts (with diagonal shoulder strap, if required to be carried) or safety harnesses;

(b) all passengers under the age of two years are properly secured by means of a child restraint device; and

(b) (i) those items of baggage in the passenger compartment which the commander reasonably considers ought by virtue of their size, weight or nature to be properly secured are properly secured; and

(iii) in the case of an aircraft capable of seating more than 30 passengers, such baggage is either stowed in the passenger compartment stowage spaces approved by the CAA for the purpose or carried in accordance with the terms of a permission granted by the CAA.

(5) The period and circumstances referred to in paragraph (4) are:

(a) after the embarkation of its passengers for the purpose of taking off, from the moment when the aircraft first moves until after it has taken off;

(b) before it lands, until it comes to rest for the purpose of the disembarkation of its passengers; and

(c) whenever, by reason of turbulent air or any emergency occurring during the flight the commander considers it necessary to take the steps specified in paragraph (4).

Public transport of passengers – commander to ensure demonstration of use of oxygen

91 (1) Subject to paragraph (4), this article applies to a flight for the purpose of the public transport of passengers by an aircraft registered in the United Kingdom.

(2) The commander of a flight to which this article applies in an aircraft for which a certificate of airworthiness was first issued (whether in the United Kingdom or elsewhere) on or after 1st January 1989 must take all reasonable steps to ensure that each of the actions described in column 1 of the following table is carried out.

(3) The commander of a flight to which this article applies in an aircraft for which a certificate of airworthiness was first issued (whether in the United Kingdom or elsewhere) before 1st January 1989 must take all reasonable steps to ensure that each of the actions described in either column 1 or in column 2 of the following table is carried out.

Column 1	**Column 2**
Before the aircraft reaches flight level 100 the method of use of the oxygen provided in the aircraft in compliance with the requirements of article 37 and Schedule 4 is demonstrated to all passengers.	Before the aircraft reaches flight level 130 the method of use of the oxygen provided in the aircraft in compliance with the requirements of article 37 and Schedule 4 is demonstrated to all passengers.
When flying above flight level 120 all passengers and cabin crew are recommended to use oxygen.	When flying above flight level 130 all passengers and cabin crew are recommended to use oxygen.
During any period when the aircraft is flying above flight level 100 oxygen is used by all the flight crew of the aircraft.	During any period when the aircraft is flying above flight level 100 oxygen is used by all the flight crew of the aircraft.

(4) This article does not apply:

(a) to a flight under and in accordance with the terms of a police air operator's certificate; or

(b) in a case where a pressure greater than 700 hectopascals is maintained in all passenger and crew compartments throughout the flight.

Aerial work and private flights – commander to ensure demonstration of use of oxygen

92 (1) Subject to paragraph (2), this article applies to an aircraft registered in the United Kingdom and flying on an aerial work or a private flight.

(2) This article does not apply in a case where a pressure greater than 700 hectopascals is maintained in all passenger and crew compartments throughout the flight.

(3) The commander of an aircraft to which this article applies must take all reasonable steps to ensure that:

(a) before the aircraft reaches flight level 130 the method of use of the oxygen provided in the aircraft in compliance with the requirements of article 37 and Schedule 4 is demonstrated to all passengers;

(b) when flying above flight level 130 all passengers are recommended to use oxygen;

(c) during any period when the aircraft is flying above flight level 100 up to and including flight level 130, oxygen is used by all the flight crew of the aircraft for that part of the flight at those altitudes which is of more than 30 minutes duration; and

(d) during any period when the aircraft is flying above flight level 130 oxygen is used by all the flight crew of the aircraft.

Pilot to remain at controls and be secured in seat

93 (1) This article applies to any flying machine or glider registered in the United Kingdom other than an EU-OPS aeroplane flying on a commercial air transport flight.

(2) The commander of an aircraft to which this article applies must cause one pilot to remain at the controls at all times while it is in flight.

(3) If the aircraft is required by or under this Order to carry two pilots, the commander must cause both pilots to remain at the controls during take-off and landing.

(4) If the aircraft carries two or more pilots (whether or not it is required to do so) and is flying on a flight for the purpose of the public transport of passengers, the commander must remain at the controls during take-off and landing.

(5) (a) Subject to sub-paragraph (b), each pilot at the controls of the aircraft must be secured in their seat by either a safety belt with or without one diagonal shoulder strap, or a safety harness.

(b) During take-off and landing a safety harness must be worn if it is required by article 37 and Schedule 4 to be provided.

(6) An operator must not permit a helicopter rotor to be turned under power for the purpose of making a flight unless there is a person at the controls entitled in accordance with article 50 to act as pilot-in-command of the helicopter.

INTENTIONALLY LEFT BLANK

PART 11 PUBLIC TRANSPORT OPERATIONS

Flight data monitoring, accident prevention and flight safety programme

94 (1) The operator of an aircraft registered in the United Kingdom flying for the purpose of public transport must establish and maintain an accident prevention and flight safety programme.

(2) The operator of an aeroplane registered in the United Kingdom with a maximum total weight authorised of more than 27,000kg flying for the purpose of public transport must include a flight data monitoring programme as part of its accident prevention and flight safety programme.

(3) The sole objective of an accident prevention and flight safety programme is the prevention of accidents and incidents and each programme must be designed and managed to meet that objective.

(4) It is not the purpose of an accident prevention and flight safety programme to apportion blame or liability.

Public transport – operator's responsibilities in relation to crew

95 (1) The operator of an aircraft registered in the United Kingdom must not permit the aircraft to fly for the purpose of public transport without first designating from among the flight crew a pilot to be the commander of the aircraft for the flight.

(2) The operator of an aircraft registered in the United Kingdom must not permit any person to be a member of the crew during any public transport flight (except a flight for the sole purpose of training persons to perform duties in aircraft) unless:

(a) that person has had the training, experience, practice and periodical tests specified in Part C of Schedule 8 for the duties to be performed; and

(b) the operator is satisfied that person is competent to perform their duties, and in particular to use the equipment provided in the aircraft for the purpose of those duties.

(3) The operator must maintain, preserve, produce and supply information respecting records relating to the matters specified in paragraph (2) in accordance with Part C of Schedule 8.

(4) During any flight for the purpose of the public transport of passengers the operator of an aircraft registered in the United Kingdom must not permit any member of the flight crew to simulate emergency manoeuvres and procedures which the operator has reason to believe will adversely affect the flight characteristics of the aircraft.

Public transport – operator's responsibilities in relation to routes and aerodromes

96 (1) The operator of an aircraft registered in the United Kingdom must not permit the aircraft to fly for the purpose of public transport without first being satisfied using every reasonable means that the aeronautical radio stations and navigational aids serving the intended route or any planned diversion are adequate for the safe navigation of the aircraft.

(2) Subject to paragraph (3), the operator of an aircraft registered in the United Kingdom must not permit the aircraft to fly for the purpose of public transport without first being satisfied using every reasonable means that:

(a) every place (whether or not an aerodrome) at which it is intended to take off or land and any alternate place (whether or not an aerodrome) at which a landing may be made are suitable for the purpose; and

(b) in particular those places will be adequately staffed and equipped and will have such staffing and equipment as may be prescribed at the time at which it is reasonably estimated such a take-off or landing will be made to ensure so far as practicable the safety of the aircraft and its passengers.

(3) The operator of an aircraft is not required for the purposes of this article to be satisfied as to the adequacy of fire-fighting, search, rescue or other services which are required only after the occurrence of an accident.

Commercial air transport and public transport flights at night or in Instrument Meteorological Conditions by aeroplanes with one power unit which are registered elsewhere than in the United Kingdom

97 An aeroplane which is registered elsewhere than in the United Kingdom and is powered by one power unit only must not fly for the purpose of commercial air transport or public transport at night or when the cloud ceiling or visibility prevailing at the aerodrome of departure or forecast for the estimated time of landing at the aerodrome at which it is intended to land or at any alternate aerodrome are less than 1000 feet and one nautical mile respectively.

PART 12 LOADING OF PUBLIC TRANSPORT AIRCRAFT

Operator's duty concerning the loading of public transport aircraft

98 (1) This Part applies to an aircraft registered in the United Kingdom which is being loaded for a public transport flight.

(2) The operator of an aircraft to which this Part applies must not cause or permit it to be loaded except in accordance with this Part.

(3) In this Part, loading includes the suspension of a load from the aircraft.

Requirement to load in accordance with loading instructions

99 (1) An aircraft to which this Part applies may only be loaded under the supervision of a person whom the operator has caused to be supplied with written instructions as to the distribution and securing of the load (in this Part called "the loading instructions") which:

(a) conform with paragraph (3); and

(b) subject to article 102(1), conform with paragraph (4).

(2) The operator must not cause or permit the aircraft to be loaded in contravention of the loading instructions.

(3) Loading instructions conform with this paragraph if:

(a) they ensure the load may safely be carried on the flight; and

(b) they ensure any conditions of the certificate of airworthiness or flight manual for the aircraft relating to the loading of the aircraft are complied with.

(4) Loading instructions conform with this paragraph if they:

(a) indicate the additional items included in the weight of the aircraft prepared for service;

(b) show the position of the centre of gravity of the aircraft at that weight; and

(c) indicate the weight of the aircraft prepared for service.

(5) In sub-paragraph (4)(c), the weight of the aircraft prepared for service means the aggregate of the weight of the aircraft, shown in the weight schedule referred to in article 35, and the weight of such additional items in or on the aircraft as the operator thinks fit to include.

Requirement for a load sheet

100 (1) Subject to article 102(1) and (2), the person supervising the loading of an aircraft to which this Part applies must:

(a) before the commencement of any such flight, prepare and sign a load sheet in duplicate conforming to the prescribed requirements; and

(b) if not the commander of the aircraft, submit the load sheet for examination by the commander of the aircraft who must sign it.

(2) Subject to paragraph (3):

(a) one copy of the load sheet must be carried in the aircraft when article 150 so requires until the flights to which it relates have been completed; and

(b) one copy of that load sheet and of the loading instructions must be preserved by the operator for at least six months after the flights and must not be carried in the aircraft.

(3) In the case of an aeroplane which has a maximum total weight authorised of not more than 2730kg, or a helicopter, if it is not reasonably practicable for the copy of the load sheet to be kept on the ground it may be carried in the aeroplane or helicopter in a container approved by the CAA for that purpose.

Carriage of baggage

101 (1) Subject to paragraph (2), the operator of an aircraft registered in the United Kingdom and flying for the purpose of the public transport of passengers must not cause or permit baggage to be carried in the passenger compartment of the aircraft unless:

(a) the baggage can be properly secured; and

(b) in the case of an aircraft capable of seating more than 30 passengers, the amount of baggage does not exceed the capacity of the spaces in the passenger compartment approved by the CAA for the purpose of stowing baggage.

(2) Paragraph (1)(b) does not apply to baggage carried in accordance with a permission issued under article 90(4)(c)(ii).

Exceptions

102 (1) The loading instructions need not conform with article 99(4) and article 100(1) does not apply if:

(a) the aircraft's maximum total weight authorised is not more than 1150kg;

(b) the aircraft's maximum total weight authorised is not more than 2730kg and the flight is intended not to exceed 60 minutes in duration and is either:

(i) a flight solely for training persons to perform duties in an aircraft; or

(i) a flight intended to begin and end at the same aerodrome; or

(c) the aircraft is a helicopter which has a maximum total weight authorised of not more than 3000kg, and a total seating capacity of not more than five persons.

(2) Article 100(1) does not apply if:

(a) the load and the way it is to be distributed and secured on the next intended flight are to be unchanged from the previous flight; and

(b) the commander of the aircraft makes and signs an endorsement to that effect on the load sheet for the previous flight, indicating:

(i) the date of the endorsement;

(ii) the place of departure on the next intended flight; and

(iii) the next intended place of destination.

PART 13 PERFORMANCE REQUIREMENTS AND OPERATING MINIMA FOR PUBLIC TRANSPORT FLIGHTS

Aeroplanes registered in the United Kingdom – public transport operating conditions and performance requirements

103 (1) An aeroplane registered in the United Kingdom and flying for the purpose of public transport must comply with subpart F of EU-OPS unless it is flying under and in accordance with a permission granted to the operator by the CAA under paragraph (5).

(2) The assessment of the ability of an aeroplane to comply with paragraph (1) must be based on the information as to its performance approved by the State of design and contained in the flight manual for the aeroplane.

(3) In the event of the approved information in the flight manual being insufficient for that purpose such assessment must be based on additional data acceptable to the CAA.

(4) The Secretary of State may prescribe requirements for aeroplanes registered in the United Kingdom in respect of their weight and related performance and flight in specified meteorological conditions or at night[(a)].

(5) The CAA may grant for any aeroplane a permission authorising it to comply with the applicable provisions of the requirements prescribed in accordance with paragraph (4).

(6) Subject to paragraph (7), an aeroplane to which this paragraph applies must fly at such an altitude as would enable the aeroplane:

(a) if it has one engine only, in the event of the failure of that engine; or

(b) if it has more than one engine, in the event of the failure of one of those engines and with the remaining engine or engines operating within the maximum continuous power conditions specified in the certificate of airworthiness or flight manual for the aeroplane,

to reach a place at which it can safely land at a height sufficient to enable it to do so.

(7) Paragraph (6) applies to an aeroplane registered in the United Kingdom flying under and in accordance with a permission granted by the CAA under paragraph (5) and flying over water for the purpose of public transport.

(8) Paragraph (6) does not apply to an aeroplane flying as may be necessary for the purpose of taking off or landing.

(9) Without prejudice to paragraph (6), an aeroplane to which this paragraph applies must not fly over water for the purpose of public transport so as to be more than 60 minutes flying time from the nearest shore, unless the aeroplane has more than two power units.

(10) Paragraph (9) applies to an aeroplane flying under and in accordance with a permission granted by the CAA under paragraph (5) if either that permission or the certificate of airworthiness of the aeroplane designates the aeroplane as being of performance group X.

(11) For the purposes of paragraph (9), flying time is calculated at normal cruising speed with one power unit inoperative.

(a) The requirements are contained in Schedule 1 to the Air Navigation (General) Regulations 2006 S.I. 2006/601.

Helicopters registered in the United Kingdom – public transport operating conditions and performance requirements

104 (1) The Secretary of State may prescribe requirements for helicopters registered in the United Kingdom in respect of their weight and related performance and flight in specified meteorological conditions or at night[(a)].

(2) Subject to paragraph (3), a helicopter registered in the United Kingdom must not fly for the purpose of public transport unless the helicopter complies with the applicable provisions of the requirements which have been prescribed for its weight and related performance and flight in specified meteorological conditions or at night.

(3) Paragraph (2) does not apply to a flight for the sole purpose of training persons to perform duties in a helicopter.

(4) The assessment of the ability of a helicopter to comply with paragraph (2) must be based on the information as to its performance approved by the State of design and contained in the flight manual for the helicopter.

(5) In the event of the approved information in the flight manual being insufficient for that purpose the assessment must be based on additional data acceptable to the CAA.

(6) Subject to paragraph (7), a helicopter registered in the United Kingdom when flying over water for the purpose of public transport must fly at such an altitude as would enable the helicopter:

(a) if it has one engine only, in the event of the failure of that engine; or

(b) if it has more than one engine, in the event of the failure of one of those engines and with the remaining engine or engines operating within the maximum continuous power conditions specified in the certificate of airworthiness or flight manual for the helicopter,

to reach a place at which it can safely land at a height sufficient to enable it to do so.

(7) Paragraph (6) does not apply to a helicopter flying as may be necessary for the purpose of taking off or landing.

Helicopters registered in the United Kingdom carrying out Performance Class 3 operations

105 (1) Without prejudice to article 104(6), a helicopter registered in the United Kingdom carrying out a Performance Class 3 operation must comply with paragraphs (2), (3), (4) and (5).

(2) The helicopter must not fly over water for the purpose of public transport in the specified circumstances unless it is equipped with the required apparatus.

(3) If the helicopter is equipped with the required apparatus and is flying under and in accordance with the terms of a national air operator's certificate, it must not fly in the specified circumstances on any flight for more than three minutes except with the permission in writing of the CAA.

(4) If the helicopter is equipped with the required apparatus and is flying on a flight under and in accordance with the terms of a police air operator's certificate on which:

(a) is carried any passenger who is not a permitted passenger, it must not fly in the specified circumstances on any flight for more than 20 minutes; or

(a) The requirements are contained in Schedule 2 to the Air Navigation (General) Regulations 2006 S.I. 2006/601.

(b) no passenger is carried other than a permitted passenger, it must not fly over water on any flight for more than 10 minutes while more than five minutes from a point from which it can make an autorotative descent to land suitable for an emergency landing.

(5) The helicopter must not fly for the purpose of public transport over that part of the bed of the River Thames which lies between the following points:

(a) Hammersmith Bridge (512918N) (0001351W); and

(b) Greenwich Reach (512906N) (0000043W),

between the ordinary high water marks on each of its banks unless it is equipped with the required apparatus.

(6) A helicopter registered in the United Kingdom which is specified in its flight manual as being in either Group A or Category A may fly for the purpose of public transport in accordance with the weight and related performance requirements prescribed for helicopters carrying out Performance Class 3 operations if:

(a) the maximum total weight authorised for the helicopter is less than 3175kg; and

(b) not more than nine passengers are carried.

(7) For the purposes of this article flying time must be calculated on the assumption that a helicopter is flying in still air at the speed specified in the flight manual for the helicopter as the speed for compliance with regulations governing flights over water.

(8) In this article:

(a) 'permitted passenger' means:

(i) a police officer;

(ii) an employee of a police authority in the course of their duty;

(iii) a medical attendant;

(iv) the holder of a valid pilot's licence who intends to act as a member of the flight crew of an aircraft flying under and in accordance with the terms of a police air operator's certificate and who is being carried for the purpose of training or familiarisation;

(v) a CAA Flight Operations Inspector;

(vi) a Home Office police aviation adviser;

(vii) an employee of a fire and rescue authority under the Fire and Rescue Services Act 2004[(a)];

(viii) an officer of revenue and customs;

(ix) an employee of the Ministry of Defence in the course of their duty; or

(x) such other person being carried for purposes connected with police operations as may be permitted by the CAA;

(b) required apparatus' means apparatus approved by the CAA enabling the helicopter to which it is fitted to land safely on water; and

(c) specified circumstances' means, in respect of a helicopter, circumstances in which it is more than 20 seconds flying time from a point from which it can make an autorotative descent to land suitable for an emergency landing.

(a) 2004 c.21.

Helicopters registered in the United Kingdom carrying out Performance Class 1 and 2 operations

106 (1) Without prejudice to article 104(6), a helicopter registered in the United Kingdom carrying out a Performance Class 1 or Performance Class 2 operation which is flying under and in accordance with the terms of:

(a) a national air operator's certificate, must not fly over water for the purpose of public transport for more than 15 minutes during any flight unless it is equipped with the required apparatus;

(b) a police air operator's certificate on which any passenger is carried who is not a permitted passenger and which is not equipped with the required apparatus, must not fly over any water on any flight for more than 15 minutes.

(2) A helicopter registered in the United Kingdom which is specified in its flight manual as being in either Group A or Category A may fly for the purpose of public transport in accordance with the weight and related performance requirements prescribed for helicopters carrying out a Performance Class 2 operation if:

(a) the maximum total weight authorised of the helicopter is less than 5700kg; and

(b) not more than 15 passengers are carried on the helicopter.

* (3) In this article 'permitted passenger', 'required apparatus' and 'specified circumstances' have the same meaning as in article 105(8)(a), (b) and (c).

Public transport aircraft registered in the United Kingdom – aerodrome operating minima

107 (1) This article applies to public transport aircraft registered in the United Kingdom.

(2) Subject to paragraphs (3) and (4), the operator of an aircraft to which this article applies must establish and include in the operations manual or the police operations manual relating to the aircraft the required information.

(3) In relation to any flight where:

(a) neither an operations manual nor a police operations manual is required by this Order; or

(b) it is not practicable to include the required information in the operations manual or the police operations manual,

the operator must comply with paragraph (4).

(4) If this paragraph applies the operator of the aircraft must:

(a) before the commencement of the flight, cause to be supplied in writing to the commander of the aircraft the required information calculated in accordance with the required data and instructions provided in accordance with paragraph (5) or (6); and

(b) cause a copy of the required information to be retained on the ground for at least three months after the flight.

(5) The operator of an aircraft for which an operations manual or a police operations manual is required by this Order, must include in that operations manual the required data and instructions.

(6) The operator of an aircraft for which neither an operations manual nor a police operations manual is required by this Order must:

* SI 2012/1751

(a) before the commencement of the flight, cause to be supplied in writing to the commander of the aircraft the required data and instructions; and

(b) cause a copy of the required data and instructions to be retained on the ground for at least three months after the flight.

(7) The specified aerodrome operating minima must not permit a landing or take-off in circumstances where the relevant aerodrome operating minima declared by the competent authority would prohibit it, unless that authority otherwise permits in writing.

(8) In establishing aerodrome operating minima for the purposes of this article the operator of the aircraft must take into account:

(a) the type and performance and handling characteristics of the aircraft and any relevant conditions in its certificate of airworthiness;

(b) the composition of its crew;

(c) the physical characteristics of the relevant aerodrome and its surroundings;

(d) the dimensions of the runways which may be selected for use; and

(e) (i) whether or not there are in use at the relevant aerodrome any aids, visual or otherwise, to assist aircraft in approach, landing or take-off, being aids which the crew of the aircraft are trained and equipped to use;

(ii) the nature of any such aids that are in use; and

(iii) the procedures for approach, landing and take-off which may be adopted according to the existence or absence of such aids.

(9) The operator must establish in relation to each runway which may be selected for use such aerodrome operating minima as are appropriate to each set of circumstances which may reasonably be expected.

(10) An aircraft to which this article applies must not commence a flight at a time when:

(a) the cloud ceiling or the runway visual range at the aerodrome of departure is less than the relevant minimum specified for take-off; or

(b) according to the information available to the commander of the aircraft it would not be able without contravening paragraphs (11) or (12), to land at the aerodrome of intended destination at the estimated time of arrival there and at any alternate aerodrome at any time at which according to a reasonable estimate the aircraft would arrive there.

(11) An aircraft to which article 83 applies, when making a descent to an aerodrome, must not descend from a height of 1000 feet or more above the aerodrome to a height less than 1000 feet above the aerodrome if the relevant runway visual range at the aerodrome is at the time less than the specified minimum for landing.

(12) An aircraft to which this article applies, when making a descent to an aerodrome, must not:

(a) continue an approach to landing at any aerodrome by flying below the relevant specified decision height; or

(b) descend below the relevant specified minimum descent height,

unless in either case from such height the specified visual reference for landing is established and is maintained.

(13) If, according to the information available, an aircraft would as regards any flight be required by rule 18(1), 19(1) or 20 of the Rules of the Air Regulations 2007[(a)] to be flown in accordance with the Instrument Flight Rules at the aerodrome of intended landing, the commander of the aircraft must select before take-off an alternate aerodrome unless no aerodrome suitable for that purpose is available.

(14) In this article:

(a) 'the required information' means detailed information about the aerodrome operating minima appropriate to every aerodrome of intended departure or landing and every alternate aerodrome;

(b) 'specified' in relation to aerodrome operating minima means such detailed information about aerodrome operating minima as has been specified by the operator in, or are ascertainable by reference to, the operations manual relating to that aircraft, or supplied in writing to the commander of the aircraft by the operator in accordance with paragraph (4); and

(c) 'the required data and instructions' means such data and instructions as will enable the commander of the aircraft to calculate the aerodrome operating minima appropriate to aerodromes the use of which cannot reasonably have been foreseen by the operator before the commencement of the flight.

Public transport aircraft registered elsewhere than in the United Kingdom – aerodrome operating minima

108 (1) This article applies to public transport aircraft registered elsewhere than in the United Kingdom.

(2) An aircraft to which this article applies must not fly in or over the United Kingdom unless the operator has made available to the flight crew aerodrome operating minima which comply with paragraph (3) for every aerodrome at which it is intended to land or take off and every alternate aerodrome.

(3) The aerodrome operating minima provided in accordance with paragraph (2) must be no less restrictive than either:

(a) minima calculated in accordance with the notified method for calculating aerodrome operating minima; or

(b) minima which comply with the law of the country in which the aircraft is registered,

whichever are the more restrictive.

(4) An aircraft must not:

(a) conduct a Category II, Category IIIA or Category IIIB approach and landing; or

(b) take off when the relevant runway visual range is less than 150 metres,

otherwise than under and in accordance with the terms of an approval to do so granted in accordance with the law of the country in which it is registered.

(5) An aircraft must not take off from or land at an aerodrome in the United Kingdom in contravention of the specified aerodrome operating minima.

(6) Without prejudice to paragraphs (4) and (5), when making a descent to an aerodrome an aircraft must not descend from a height of 1000 feet or more above the aerodrome to a height of less than 1000 feet above the aerodrome if the relevant runway visual range at the aerodrome is at the time less than the specified minimum for landing.

(a) S.I. 2007/734 to which there are amendments not relevant to this provision.

(7) Without prejudice to paragraphs (4) and (5), when making a descent to an aerodrome an aircraft must not:

(a) continue an approach to landing at any aerodrome by flying below the relevant specified decision height; or

(b) descend below the relevant specified minimum descent height,

unless, in either case, the specified visual reference for landing is established and maintained from such height.

(8) In this article 'specified' means specified by the operator in the aerodrome operating minima made available to the flight crew under paragraph (2).

INTENTIONALLY LEFT BLANK

PART 14 OPERATING MINIMA AND EQUIPMENT REQUIREMENTS FOR AERIAL WORK AND PRIVATE AIRCRAFT

Aerial work and private aircraft – aerodrome operating minima

109 (1) This article applies to aerial work aircraft and private aircraft.

(2) An aircraft to which this article applies must not:

(a) conduct a Category II, Category IIIA or Category IIIB approach and landing; or

(b) take off when the relevant runway visual range is less than 150 metres,

otherwise than under and in accordance with the terms of an approval to do so granted in accordance with the law of the country in which it is registered.

(3) In the case of an aircraft registered in the United Kingdom, the approval referred to in paragraph (2) is issued by the CAA.

(4) Without prejudice to paragraph (2), when making a descent at an aerodrome to a runway for which there is a notified instrument approach procedure an aircraft must not descend from a height of 1000 feet or more above the aerodrome to a height less than 1000 feet above the aerodrome if the relevant runway visual range for that runway is at the time less than the specified minimum for landing.

(5) Without prejudice to paragraph (2), when making a descent to a runway for which there is a notified instrument approach procedure an aircraft must not:

(a) continue an approach to landing on such a runway by flying below the relevant specified decision height; or

(b) descend below the relevant specified minimum descent height,

unless in either case the specified visual reference for landing is established and maintained from such height.

(6) If, according to the information available, an aircraft would be required by rule 18(1), 19(1) or 20 of the Rules of the Air Regulations 2007 to be flown in accordance with the Instrument Flight Rules at the aerodrome of intended landing, the commander of the aircraft must select before take-off an alternate aerodrome unless no aerodrome suitable for that purpose is available.

(7) A flight to be conducted in accordance with the Instrument Flight Rules to an aerodrome when no suitable alternate aerodrome is available must not be commenced unless:

(a) a designated instrument approach procedure is available for the aerodrome of intended landing; and

(b) available current meteorological information indicates that visual meteorological conditions will exist at the aerodrome of intended landing from two hours before to two hours after the estimated time of arrival.

(8) A flight must not be continued towards the aerodrome of intended landing unless the latest available information indicates that conditions at that aerodrome, or at least one alternate aerodrome, will, at the estimated time of arrival, be at or above the specified aerodrome operating minima.

(9) In this article:

(a) 'specified' in relation to aerodrome operating minima means such detailed information about aerodrome operating minima as have been notified for the aerodrome or, if the relevant minima have not been notified, such minima as are ascertainable by reference to the notified method for calculating aerodrome operating minima; and

(b) 'designated' in relation to an instrument approach procedure means notified, prescribed or otherwise designated by the relevant competent authority.

Aerial work and private aircraft – survival equipment

110 (1) This article applies to any aerial work aircraft or private aircraft registered in the United Kingdom.

(2) The commander of an aircraft to which this article applies must be satisfied on reasonable grounds before take-off that the aircraft carries such additional equipment as the commander reasonably considers necessary for the purposes of facilitating the survival of the persons carried in the aircraft.

(3) In complying with paragraph (2) the commander must have regard to the circumstances of the intended flight, including in particular the likelihood of ditching and the availability of search and rescue facilities.

PART 15 OPERATIONS – GENERAL PROVISIONS

Wearing of survival suits by crew

111 (1) Subject to paragraph (2), each member of the crew of an aircraft registered in the United Kingdom must wear a survival suit if such a suit is required to be carried by article 37 and Schedule 4.

(2) This article does not apply to any member of the crew of an aircraft flying under and in accordance with the terms of a police air operator's certificate.

Operation of radio in aircraft

112 (1) A radio station in an aircraft must not be operated, whether or not the aircraft is in flight, except:

(a) in accordance with the conditions of the licence issued for that station under the law of the country in which the aircraft is registered or the State of the operator; and

(b) by a person duly licensed or otherwise permitted to operate the radio station under that law.

(2) Subject to paragraphs (3) and (4), whenever an aircraft is in flight in such circumstances that it is required by or under this Order or by EU-OPS to be equipped with radio communication equipment, a continuous radio watch must be maintained by a member of the flight crew listening to the signals transmitted on the frequency notified or designated for use by that aircraft by a message received from an appropriate aeronautical radio station.

(3) The radio watch may be discontinued or continued on another frequency if a message from an appropriate aeronautical radio station permits this.

(4) The radio watch may be kept by a device installed in the aircraft if:

(a) the appropriate aeronautical radio station has been informed to that effect and has raised no objection; and

(b) that station is notified, or in the case of a station situated in a country other than the United Kingdom, otherwise designated as transmitting a signal suitable for that purpose.

(5) Whenever an aircraft is in flight in such circumstances that it is required by or under this Order or by EU-OPS to be equipped with radio communication or radio navigation equipment, a member of the flight crew must operate that equipment in such a manner as the appropriate air traffic control unit may instruct or as may be notified in relation to the airspace in which the aircraft is flying.

(6) The radio station in an aircraft must not be operated so as to cause interference which impairs the efficiency of aeronautical telecommunications or navigational services, and in particular emissions must not be made except:

(a) emissions of the class and frequency for the time being in use, in accordance with general international aeronautical practice, in the airspace in which the aircraft is flying;

(b) distress, urgency and safety messages and signals, in accordance with general international aeronautical practice;

(c) messages and signals relating to the flight of the aircraft, in accordance with general international aeronautical practice; and

(d) such public correspondence messages as may be permitted by or under the aircraft radio station licence referred to in paragraph (1).

(7) In any flying machine registered in the United Kingdom which is flying on a public transport flight the pilot and the flight engineer (if any) must not make use of a hand-held microphone (whether for the purpose of radio communication or of intercommunication within the aircraft) whilst the aircraft is flying in controlled airspace below flight level 150 or is taking off or landing.

Operation of airborne collision avoidance system

113 On any flight on which an airborne collision avoidance system is required to be carried in an aeroplane by article 39 and Schedule 5, the system must be operated:

(a) in the case of an aircraft to which article 83 applies, in accordance with procedures contained in the operations manual for the aircraft;

(b) in the case of an aircraft registered in the United Kingdom to which article 83 does not apply, in accordance with procedures which are suitable having regard to the purposes of the equipment; or

(c) in the case of an aircraft which is registered elsewhere than in the United Kingdom, in accordance with any procedures with which it is required to comply under the law of the country in which the aircraft is registered.

Training in operation of airborne collision avoidance system

114 (1) This article applies to any aeroplane to which article 83 does not apply.

(2) Before commencing an ACAS equipped flight, the commander must be satisfied on reasonable grounds that every member of the flight crew has had the training specified in paragraph (4).

(3) A person must not act as a member of the flight crew on an ACAS equipped flight in an aeroplane to which this article applies unless that person has had the training specified in paragraph (4).

(4) The training referred to in paragraphs (2) and (3) is:

(a) suitable training in the operation of the airborne collision avoidance system in the aeroplane; and

(b) suitable training in the use of the procedures referred to in article 113(b).

(5) In this article 'an ACAS equipped flight' means a flight on which an airborne collision avoidance system is required to be carried by article 39 and Schedule 5.

Operation of vibration health monitoring systems

115 The operator of a helicopter on which a vibration health monitoring system is required to be carried by paragraph 4(15) of Schedule 4 must operate that equipment in accordance with procedures approved by the CAA.

Method of carriage of persons

116 (1) A person must not:

(a) subject to paragraphs (2) and (3), be in or on any part of an aircraft in flight which is not a part designed for the accommodation of persons and in particular a person must not be on the wings or undercarriage of an aircraft;

(b) be in or on any object, other than a glider or flying machine, towed by or attached to an aircraft in flight.

(2) A person may have temporary access to:

(a) any part of an aircraft for the purpose of taking action necessary for the safety of the aircraft or of any person, animal or goods in the aircraft; and

(b) any part of an aircraft in which cargo or stores are carried, which part is designed to enable a person to have access to it while the aircraft is in flight.

(3) This article does not apply to a passenger in a helicopter flying under and in accordance with a police air operator's certificate who is disembarking in accordance with a procedure contained in the police operations manual for the helicopter.

Functioning of exits – commercial air transport aeroplanes and public transport aeroplanes and helicopters

117 (1) This article applies to commercial air transport aeroplanes, public transport aeroplanes and public transport helicopters registered in the United Kingdom.

(2) Subject to paragraph (5), whenever an aeroplane or helicopter to which this article applies is carrying passengers, every exit from the aeroplane or helicopter and every internal door in the aeroplane or helicopter must be in working order.

(3) Subject to paragraph (4), during take-off and landing and during any emergency, every exit and door in the aeroplane or helicopter must be kept free of obstruction and must not be fastened by locking or otherwise so as to prevent, hinder or delay its use by passengers.

(4) In the case of:

(a) an exit which, in accordance with arrangements approved by the CAA either generally or in relation to a class of aeroplane or helicopter or a particular aeroplane or helicopter, is not required for use by passengers, the exit may be obstructed by cargo;

(b) a door between the flight crew compartment and any adjacent compartment to which passengers have access, the door may be locked or bolted if the commander of the aeroplane or helicopter so determines, for the purpose of preventing access by passengers to the flight crew compartment;

(c) any internal door which is so placed that it cannot prevent, hinder or delay the exit of passengers from the aeroplane or helicopter in an emergency if it is not in working order, paragraph (3) does not apply.

(5) Subject to compliance with paragraph (6), if one, but not more than one, exit from an aeroplane or helicopter becomes inoperative at a place where it is not reasonably practicable for it to be repaired or replaced, nothing in this article prevents that aeroplane or helicopter from carrying passengers until it next lands at a place where the exit can be repaired or replaced.

(6) This paragraph is complied with if:

(a) the number of passengers carried and the position of the seats which they occupy are in accordance with arrangements approved by the CAA either in relation to the particular aeroplane or helicopter or to a class of aeroplane or helicopter; and

(b) in accordance with arrangements so approved, the inoperative exit is fastened by locking or otherwise, the words 'exit' or 'emergency exit' are covered, and the exit is marked by a red disc at least 23 centimetres in diameter with a horizontal white bar across it bearing the words 'No Exit' in red letters.

Marking of exits – commercial air transport aeroplanes and public transport aeroplanes and helicopters

118 (1) This article applies to commercial air transport aeroplanes, public transport aeroplanes and public transport helicopters registered in the United Kingdom.

(2) An operator must ensure that every exit from an aeroplane or helicopter to which this article applies is marked in accordance with this article.

(3) Every exit from such an aeroplane or helicopter must be marked on interior surfaces with the words 'exit' or 'emergency exit' in capital letters, which must be red in colour and if necessary outlined in white to contrast with the background.

(4) Every exit from such an aeroplane or helicopter must be marked on exterior surfaces with the words 'exit' or 'emergency exit' in capital letters, which must be located on a background which provides adequate contrast.

(5) Every exit from such an aeroplane or helicopter must be marked on interior surfaces on or near the inside surface of the door or other closure of the exit with instructions in English and with diagrams to indicate the correct method of opening the exit, which must be red in colour and located on a background which provides adequate contrast.

(6) Every exit from such an aeroplane or helicopter which may be opened from the outside must be marked on or near the exterior surface of the door or other closure of the exit with instructions in English and with diagrams to indicate the correct method of opening the exit, which must be located on a background which provides adequate contrast.

(7) The markings required by this article must be:

(a) painted, or affixed by other equally permanent means; and

(b) kept clean and unobscured at all times.

Marking of break-in areas

119 (1) This article applies to all aircraft registered in the United Kingdom.

(2) An operator must ensure that, if areas of the fuselage suitable for break-in by rescue crews in emergency are marked on an aircraft, such areas are marked in accordance with this article.

(3) The markings on the exterior surface of the fuselage must show the areas (in this article referred to as 'break-in areas') which can, for the purposes of rescue in an emergency, be most readily and effectively broken into by persons outside the aircraft.

(4) The break-in areas must be marked by right angled corner markings, each arm of which must be nine centimetres in length along its outer edge and three centimetres in width.

(5) If the corner markings of the break-in area are more than two metres apart, intermediate lines nine centimetres by three centimetres must be inserted so that there is no more than two metres between adjacent marks.

(6) The colour of break-in markings must be red or yellow, and if necessary they must be outlined in white to contrast with the background.

(7) If instructions are marked on the break-in areas, the words 'Cut Here in Emergency' must be marked across the centre of each break-in area in capital letters.

(8) The markings required by this article must be:

(a) painted, or affixed by other equally permanent means; and

(b) kept clean and unobscured at all times.

Flights over any foreign country

120 (1) The operator and the commander of an aircraft registered in the United Kingdom (or, if the operator's principal place of business or permanent residence is in the United Kingdom, any other aircraft) which is being flown over any foreign country, must not allow that aircraft to be used for a purpose which is prejudicial to the security, public order or public health of, or to the safety of air navigation in relation to, that country.

(2) A person does not contravene paragraph (1) if that person neither knew nor suspected that the aircraft was being or was to be used for a purpose referred to in that paragraph.

(3) Subject to paragraph (4), the operator and the commander of an aircraft registered in the United Kingdom (or, if the operator's principal place of business or permanent residence is in the United Kingdom, any other aircraft) which is being flown over any foreign country must comply with any directions given by the appropriate aeronautical authorities of that country whenever:

(a) the flight has not been duly authorised; or

(b) there are reasonable grounds for the appropriate aeronautical authorities to believe that the aircraft is being or will be used for a purpose which is prejudicial to the security, public order or public health of, or to the safety of air navigation in relation to, that country.

(4) A direction under paragraph (3) need not be complied with if to do so would endanger the lives of persons on board or the safety of the aircraft.

(5) A person does not contravene paragraph (3) if that person neither knew nor suspected that directions were being given by the appropriate aeronautical authorities.

(6) The requirement in paragraph (3) is without prejudice to any other requirement to comply with directions of an aeronautical authority.

(7) In this article 'appropriate aeronautical authorities' includes any person, whether a member of a country's military or civil authorities, authorised under the law of the foreign country to issue directions to aircraft flying over that country.

INTENTIONALLY LEFT BLANK

PART 16 HEIGHT KEEPING AND NAVIGATION

Minimum navigation performance

121 (1) An aircraft registered in the United Kingdom must not fly in North Atlantic Minimum Navigation Performance Specification airspace unless it is equipped with navigation systems which enable the aircraft to maintain the prescribed navigation performance capability.

(2) The equipment required by paragraph (1) must:

(a) be approved by EASA or the CAA;

(b) be installed in a manner approved by EASA in the case of an EASA aircraft and by the CAA in the case of a non-EASA aircraft;

(c) be maintained in a manner approved by the CAA; and

(d) while the aircraft is flying in that airspace, be operated in accordance with procedures approved by the CAA.

Height keeping performance – aircraft registered in the United Kingdom

122 (1) Unless otherwise authorised by the appropriate air traffic control unit, an aircraft registered in the United Kingdom must not fly in Reduced Vertical Separation Minimum airspace unless it is equipped with height keeping systems which enable the aircraft to maintain the required height keeping performance capability.

(2) The equipment required by paragraph (1) must:

(a) be approved by EASA or the CAA;

(b) be installed in a manner approved by EASA in the case of an EASA aircraft and by the CAA in the case of a non-EASA aircraft;

(c) be maintained in a manner approved by the CAA; and

(d) while the aircraft is flying in that airspace, be operated in accordance with procedures approved by the CAA.

Height keeping performance – aircraft registered elsewhere than in the United Kingdom

123 (1) Unless otherwise authorised by the appropriate air traffic control unit an aircraft registered elsewhere than in the United Kingdom must not fly in Reduced Vertical Separation Minimum airspace in the United Kingdom unless:

(a) it is so equipped with height keeping systems as to comply with the law of the country in which the aircraft is registered in so far as that law requires it to be so equipped when flying in any specified airspace; and

(b) the equipment is capable of being operated so as to enable the aircraft to maintain the height keeping performance prescribed for the airspace in which the aircraft is flying, and it is so operated.

Area navigation and required navigation performance capabilities – aircraft registered in the United Kingdom

124 (1) Subject to paragraph (3) an aircraft registered in the United Kingdom must not fly in Required Navigation Performance airspace unless it is equipped with area navigation equipment which enables the aircraft to maintain the navigation performance capability notified, prescribed or otherwise designated for that airspace.

(2) The equipment required by paragraph (1) must:

(a) be approved by EASA or the CAA;

(b) be installed in a manner approved by EASA in the case of an EASA aircraft and the CAA in the case of a non-EASA aircraft;

(c) be maintained in a manner approved by the CAA; and

(d) while the aircraft is flying in that airspace, be operated in accordance with procedures approved by the CAA.

(3) An aircraft need not comply with the requirements of this article if:

(a) the appropriate air traffic control unit, having been made aware of the lack of compliance, authorises the flight; and

(b) the aircraft complies with any instructions the air traffic control unit may give.

Area navigation and required navigation performance capabilities – aircraft registered elsewhere than in the United Kingdom

125 (1) An aircraft registered elsewhere than in the United Kingdom must not fly in Required Navigation Performance airspace in the United Kingdom unless it is equipped with area navigation equipment so as to comply with the law of the country in which the aircraft is registered in so far as that law requires it to be so equipped when flying within designated required navigation performance airspace.

(2) Subject to paragraph (3), the navigation equipment must be capable of being operated so as to enable the aircraft to maintain the navigation performance capability notified for the airspace in which the aircraft is flying, and must be so operated.

(3) An aircraft need not comply with the requirements of this article if:

(a) the appropriate United Kingdom air traffic control unit, having been made aware of the lack of compliance, authorises the flight; and

(b) the aircraft complies with any instructions the air traffic control unit may give.

PART 17 TOWING AND DROPPING

Towing of gliders

126 (1) An aircraft in flight must not tow a glider unless the flight manual for the towing aircraft includes an express provision that it may be used for that purpose.

(2) The length of the combination of towing aircraft, tow rope and glider in flight must not exceed 150 metres.

(3) The commander of an aircraft which is about to tow a glider must be satisfied, before the towing aircraft takes off that:

(a) the tow rope is in good condition and is of adequate strength for the purpose;

(b) the combination of towing aircraft and glider, having regard to its performance in the conditions to be expected on the intended flight and to any obstructions at the place of departure and on the intended route, is capable of safely taking off, reaching and maintaining a safe height at which to separate the combination;

(c) after separation the towing aircraft can make a safe landing at the place of intended destination;

(d) signals have been agreed and communication established with persons suitably stationed so as to enable the glider to take off safely; and

(e) emergency signals have been agreed between the commander of the towing aircraft and the commander of the glider, to be used, respectively, by the commander of the towing aircraft to indicate that the tow should immediately be released by the glider, and by the commander of the glider to indicate that the tow cannot be released.

(4) The glider must be attached to the towing aircraft by means of the tow rope before the aircraft takes off.

Operation of self-sustaining gliders

127 A self-sustaining glider must not take off under its own power.

Towing, picking up and raising of persons and articles

128 (1) Subject to the provisions of this article, an aircraft in flight must not, by means external to the aircraft, tow any article, other than a glider, or pick up or raise any person, animal or article, unless:

(a) there is a certificate of airworthiness issued or rendered valid for that aircraft under the law of the country in which the aircraft is registered; and

(b) that certificate or the flight manual for the aircraft includes an express provision that it may be used for that purpose.

(2) An aircraft must not launch or pick up tow ropes, banners or similar articles other than at an aerodrome.

(3) An aircraft in flight must not tow any article, other than a glider, at night or when flight visibility is less than one nautical mile.

(4) The length of the combination of towing aircraft, tow rope, and article in tow, must not exceed 150 metres.

(5) A helicopter must not fly at any height over a congested area of a city, town or settlement at any time when any article, person or animal is suspended from the helicopter.

(6) A passenger must not be carried in a helicopter at any time when an article, person or animal is suspended from the helicopter, other than:

(a) a passenger who has duties to perform in connection with the article, person or animal;

(b) a passenger who has been picked up or raised by means external to the helicopter; or

(c) a passenger who it is intended will be lowered to the surface by means external to the helicopter.

(7) Nothing in this article:

(a) prohibits the towing in a reasonable manner by an aircraft in flight of any radio aerial, any instrument which is being used for experimental purposes, or any signal, apparatus or article required or permitted by or under this Order to be towed or displayed by an aircraft in flight;

(b) prohibits the picking up or raising of any person, animal or article in an emergency or for the purpose of saving life;

(c) applies to any aircraft while it is flying in accordance with the B Conditions; or

(d) permits the towing or picking up of a glider otherwise than in accordance with article 126.

Dropping of articles and animals

129 (1) Articles and animals (whether or not attached to a parachute) must not be dropped, or permitted to drop, from an aircraft in flight so as to endanger persons or property.

(2) Subject to paragraphs (3) and (4), articles and animals (whether or not attached to a parachute) must not be dropped, or permitted to drop, to the surface from an aircraft flying over the United Kingdom except under and in accordance with the terms of an aerial application certificate granted under article 131.

(3) Paragraph (2) does not apply to the dropping of articles by, or with the authority of, the commander of the aircraft in any of the following circumstances:

(a) the dropping of articles for the purpose of saving life;

(b) the jettisoning, in case of emergency, of fuel or other articles in the aircraft;

(c) the dropping of ballast in the form of fine sand or water;

(d) the dropping of articles solely for the purpose of navigating the aircraft in accordance with ordinary practice or with the provisions of this Order;

(e) the dropping at an aerodrome of tow ropes, banners, or similar articles towed by aircraft;

(f) with the permission of the CAA, the dropping of articles for the purposes of public health or as a measure against weather conditions, surface icing or oil pollution, or for training for the dropping of articles for any such purposes; or

(g) with the permission of the CAA, the dropping of wind drift indicators for the purpose of enabling parachute descents to be made.

(4) Paragraph (2) does not apply to the lowering of any article or animal from a helicopter to the surface, if:

(a) there is a certificate of airworthiness issued or rendered valid for the helicopter under the law of the country in which it is registered; and

(b) that certificate or the flight manual for the helicopter includes an express provision that it may be used for that purpose.

(5) In this article 'dropping' includes projecting and lowering.

Dropping of persons and grant of parachuting permissions

130 (1) Subject to paragraphs (9), (10) and (11), a person must not drop, be dropped or be permitted to drop to the surface or jump from an aircraft flying over the United Kingdom except under and in accordance with the terms of either a police air operator's certificate or a parachuting permission granted by the CAA under this article.

(2) A person must not drop, be dropped or be permitted to drop from an aircraft in flight so as to endanger persons or property.

(3) The CAA must grant a parachuting permission if it is satisfied that the applicant is a fit person to hold the permission and is competent to conduct parachuting safely, having regard in particular to the applicant's:

(a) previous conduct and experience; and

(b) equipment, organisation, staffing and other arrangements.

(4) An aircraft must not be used for the purpose of dropping persons unless:

(a) (i) there is a certificate of airworthiness issued or rendered valid for that aircraft under the law of the country in which the aircraft is registered;

(ii) that certificate or the flight manual for the aircraft includes an express provision that it may be used for that purpose; and

(iii) the aircraft is operated in accordance with a written permission granted by the CAA under this article; or

(c) the aircraft is operated under and in accordance with the terms of a police air operator's certificate.

(5) Every applicant for and holder of a parachuting permission must make available to the CAA if requested a parachuting manual.

(6) The holder of a parachuting permission must make such amendments or additions to its parachuting manual as the CAA may require.

(7) The holder of a parachuting permission must make its parachuting manual available to every employee or person who is engaged or may engage in parachuting activities conducted by the holder.

(8) The manual must contain all such information and instructions as may be necessary to enable such employees or persons to perform their duties.

(9) Nothing in this article applies to the descent of persons by parachute from an aircraft in an emergency.

(10) Nothing in this article prohibits the lowering of any person in an emergency or for the purpose of saving life.

(11) Nothing in this article prohibits the lowering of any person from a helicopter to the surface if there is a certificate of airworthiness issued or rendered valid for the helicopter under the law of the country in which it is registered and that certificate or the flight manual for the helicopter includes an express provision that it may be used for that purpose.

(12) In this article 'dropping' includes projecting and lowering.

Dropping articles for purposes of agriculture etc. and grant of aerial application certificates

131 (1) An aircraft must not be used for the dropping of articles for the purposes of agriculture, horticulture or forestry or for training for the dropping of articles for any of such purposes, otherwise than under and in accordance with the terms of an aerial application certificate granted to the operator of the aircraft under paragraph (2).

(2) The CAA must grant an aerial application certificate if it is satisfied that the applicant is a fit person to hold the certificate and is competent to secure the safe operation of the aircraft specified in the certificate on flights for the purposes specified in paragraph (1), having regard in particular to the applicant's:

(a) previous conduct and experience; and

(b) equipment, organisation, staffing and other arrangements.

(3) If the CAA grants an aerial application certificate it may do so subject to such conditions as it thinks fit, including conditions for ensuring that the aircraft and any article dropped from it do not endanger persons or property in the aircraft or elsewhere.

(4) Every applicant for and holder of an aerial application certificate must make available to the CAA if requested an aerial application manual.

(5) The holder of an aerial application certificate must make its aerial application manual available to every member of the operating staff.

(6) The manual must contain all such information and instructions as may be necessary to enable the operating staff to perform their duties.

(7) The holder of an aerial application certificate must make such amendments or additions to the manual as the CAA may require.

PART 18 DANGEROUS GOODS, WEAPONS AND MUNITIONS OF WAR

Carriage of dangerous goods

132 (1) The Secretary of State may make regulations prescribing:

(a) the classification of certain articles and substances as dangerous goods;

(b) the categories of dangerous goods which an aircraft may not carry;

(c) the conditions which apply to the loading on, suspension beneath and carriage by an aircraft of dangerous goods;

(d) the manner in which dangerous goods must be packed, marked, labelled and consigned before being loaded on, suspended beneath or carried by an aircraft;

(e) any other provisions for securing the safety of aircraft and any apparatus attached to aircraft, and the safety of persons and property on the surface in relation to the loading on, suspension beneath or carriage by an aircraft of dangerous goods;

(f) the persons to whom information about the carriage of dangerous goods must be provided;

(g) the documents which must be produced to the CAA or an authorised person on request; and

(h) the powers to be conferred on an authorised person relating to the enforcement of the regulations made under this article.

(2) It is an offence to contravene or permit the contravention of or fail to comply with any regulations made under this article.

(3) The provisions of this article and of any regulations made under this article are additional to and not in derogation from articles 133 and 134.

Carriage of weapons and of munitions of war – requirement for permission and for commander to be informed

133 (1) This article applies to any aircraft other than an EU-OPS aeroplane on a commercial air transport flight.

(2) Subject to article 135(1) and (3), an aircraft must not carry any munition of war unless:

(a) the munition of war is carried with the permission of the CAA; and

(b) the commander of the aircraft is informed in writing by the operator before the flight commences of the type, weight or quantity and location of any munition of war on board or suspended beneath the aircraft and any conditions of the permission of the CAA.

(3) Subject to article 135(2) and (3), it is unlawful for an aircraft to carry any sporting weapon or munition of war in any compartment or apparatus to which passengers have access.

Prohibition on carrying on board sporting weapons or munitions of war

134 (1) Subject to article 135(2) and (3), it is unlawful for a person to carry or have in their possession or take or cause to be taken on board an aircraft, to suspend or cause to be suspended beneath an aircraft or to deliver or cause to be delivered for carriage on an aircraft any sporting weapon or munition of war unless the provisions of paragraph (2) are complied with.

(2) The provisions referred to in paragraph (1) are that:

(a) the sporting weapon or munition of war:

(i) is either part of the baggage of a passenger on the aircraft or consigned as cargo;

(ii) is carried in a part of the aircraft, or in any apparatus attached to the aircraft inaccessible to passengers; and

(iii) in the case of a firearm, is unloaded;

(b) information about the sporting weapon or munition of war has been supplied by that passenger or by the consignor to the operator before the flight commences; and

(c) the operator consents to the carriage of such sporting weapon or munition of war by the aircraft.

Exceptions concerning carriage of weapons and munitions of war

135 (1) In the case of an aircraft which is flying under and in accordance with the terms of a police air operator's certificate the commander of the aircraft must be informed of the matters referred to in article 133(2)(b) but need not be so informed in writing.

(2) Article 133(3) and article 134 do not apply to or in relation to an aircraft which is flying under and in accordance with the terms of a police air operator's certificate.

(3) Nothing in this Part applies to any sporting weapon or munition of war taken or carried on board an aircraft registered in a country other than the United Kingdom if the sporting weapon or munition of war may under the law of the country in which the aircraft is registered be lawfully taken or carried on board for the purpose of ensuring the safety of the aircraft or of persons on board.

Definitions

136 (1) In this Part:

(a) 'munition of war' means:

(i) any weapon or ammunition;

(ii) any article containing an explosive, noxious liquid or gas; or

(iii) any other thing,

which is designed or made for use in warfare or against persons, including parts, whether components or accessories, for such weapon, ammunition or article;

(b) 'sporting weapon' means:

(i) any weapon or ammunition;

(ii) any article containing an explosive, noxious liquid or gas; or

(iii) any other thing, including parts, whether components or accessories, for such weapon, ammunition or article,

which is not a munition of war.

PART 19 PROHIBITED BEHAVIOUR

Endangering safety of an aircraft

137 A person must not recklessly or negligently act in a manner likely to endanger an aircraft, or any person in an aircraft.

Endangering safety of any person or property

138 A person must not recklessly or negligently cause or permit an aircraft to endanger any person or property.

Drunkenness in aircraft

139 (1) A person must not enter any aircraft when drunk, or be drunk in any aircraft.

(2) A person must not, when acting as a member of the crew of any aircraft or being carried in any aircraft for the purpose of acting as a member of the crew, be under the influence of drink or a drug to such an extent as to impair their capacity so to act.

Smoking in aircraft

140 (1) Notices indicating when smoking is prohibited must be exhibited in every aircraft registered in the United Kingdom so as to be visible from each passenger seat.

(2) A person must not smoke in any compartment of an aircraft registered in the United Kingdom at a time when smoking is prohibited in that compartment by a notice to that effect exhibited by or on behalf of the commander of the aircraft.

Authority of commander of an aircraft

141 Every person in an aircraft must obey all lawful commands which the commander of that aircraft may give for the purpose of securing the safety of the aircraft and of persons or property carried in the aircraft, or the safety, efficiency or regularity of air navigation.

Acting in a disruptive manner

142 A person must not while in an aircraft:

(a) use any threatening, abusive or insulting words towards a member of the crew of the aircraft;

(b) behave in a threatening, abusive, insulting or disorderly manner towards a member of the crew of the aircraft; or

(c) intentionally interfere with the performance by a member of the crew of the aircraft of the crew member's duties.

Stowaways

143 A person must not secrete himself or herself for the purpose of being carried in an aircraft without the consent of either the operator or the commander or of any other person entitled to give consent to being carried in the aircraft.

INTENTIONALLY LEFT BLANK

PART 20 FATIGUE OF CREW AND PROTECTION OF CREW FROM COSMIC RADIATION

Application and interpretation of Part 20

144 (1) Subject to paragraph (2), articles 145 and 146 apply to an aircraft registered in the United Kingdom which is either:

(a) flying on a public transport flight; or

(b) operated by the holder of a national air operator's certificate.

(2) In this Part:

(a) 'flight time' means all time spent by a person as a member of the crew in:

(i) a civil aircraft whether or not registered in the United Kingdom (other than such an aircraft which has a maximum total weight authorised of not more than 1600kg and which is not flying for the purpose of commercial air transport, public transport or aerial work); or

(ii) a military aircraft (other than a military aircraft which has a maximum total weight authorised of not more than 1600kg and which is flying on a military air experience flight),

while it is in flight;

(b) 'day' means a continuous period of 24 hours beginning at midnight Co-ordinated Universal Time;

(c) a helicopter is deemed to be in flight from the moment the helicopter first moves under its own power for the purpose of taking off until the rotors are next stopped; and

(d) a military air experience flight is a flight by a military aircraft operated under the auspices of the Royal Air Force Air Cadet Organisation for the purpose of providing air experience to its cadets.

Fatigue of crew – operator's responsibilities

145 (1) The operator of an aircraft to which this article applies must not cause or permit that aircraft to make a flight unless:

(a) the operator has established a scheme for the regulation of flight times for every person flying in that aircraft as a member of its crew;

(b) the scheme is approved by the CAA;

(c) either:

(i) the scheme is incorporated in the operations manual required by article 83; or

(ii) in any case where an operations manual is not required by that article, the scheme is incorporated in a document, a copy of which has been made available to every person flying in the aircraft as a member of its crew; and

(d) the operator has taken all such steps as are reasonably practicable to ensure that the provisions of the scheme will be complied with by every person flying in that aircraft as a member of its crew.

(2) The operator of an aircraft to which this article applies must not cause or permit any person to fly as a member of its crew who the operator knows or has reason to believe is suffering from or, having regard to the circumstances of the flight to be undertaken,

is likely to suffer from, such fatigue as may endanger the safety of the aircraft or of its occupants.

(3) The operator of an aircraft to which this article applies must not cause or permit any person to fly in the aircraft as a member of its flight crew unless the operator possesses an accurate and up-to-date record for that person and for the 28 days immediately preceding the flight showing:

(a) all flight times; and

(b) brief details of the nature of the functions performed in the course of those flight times.

(4) Subject to article 159, the record referred to in paragraph (3) must be preserved by the operator of the aircraft for at least 12 months after the flight referred to in that paragraph.

Fatigue of crew – responsibilities of crew

146 (1) A person must not act as a member of the crew of an aircraft to which this article applies if they know or suspect that they are suffering from or, having regard to the circumstances of the flight to be undertaken, are likely to suffer from, such fatigue as may endanger the safety of the aircraft or of its occupants.

(2) A person must not act as a member of the flight crew of an aircraft to which this article applies without first ensuring that the operator of the aircraft is aware of their flight times during the period of 28 days preceding the flight.

Flight times – responsibilities of flight crew

147 (1) Subject to paragraphs (2) and (3), a person must not act as a member of the flight crew of an aircraft registered in the United Kingdom if, at the beginning of the flight, the aggregate of all that person's previous flight times:

(a) during the period of 28 consecutive days expiring at the end of the day on which the flight begins exceeds 100 hours; or

(b) during the period of twelve months expiring at the end of the previous month exceeds 900 hours.

(2) This article does not apply to a flight which is a private flight in an aircraft which has a maximum total weight authorised of not more than 1600kg.

(3) A person may act as a member of the flight crew on a private or aerial work flight where the operator does not hold a national air operator's certificate if, at the time when the flight begins, the aggregate of all the flight times of the member of the flight crew concerned since last being medically examined and found fit by a person approved by the CAA for the purpose of article 72(3) is not more than 25 hours.

Protection of air crew from cosmic radiation

148 (1) A relevant undertaking must take appropriate measures to:

(a) assess the exposure to cosmic radiation when in flight of those air crew who are liable to be subject to cosmic radiation in excess of 1 milliSievert per year;

(b) take into account the assessed exposure when organising work schedules with a view to reducing the doses of highly exposed air crew; and

(c) inform the workers concerned of the health risks their work involves.

(2) A relevant undertaking must ensure that in relation to a pregnant air crew member, the conditions of exposure to cosmic radiation when she is in flight are such that the equivalent dose to the foetus will be as low as reasonably achievable and is unlikely to exceed 1 milliSievert during the remainder of the pregnancy.

(3) Nothing in paragraph (2) requires the undertaking concerned to take any action in relation to an air crew member until she has notified the undertaking in writing that she is pregnant.

(4) The definition in article 255 of 'crew' does not apply for the purposes of this article.

(5) In this article:

(a) 'air crew' has the same meaning as in article 42 of Council Directive 96/29/ Euratom of 13th May 1996 laying down basic safety standards for the protection of the health of workers and the general public against the dangers arising from ionising radiation[(a)];

(b) 'undertaking' includes a natural or legal person and 'relevant undertaking' means an undertaking established in the United Kingdom which operates aircraft but does not include an EU-OPS operator;

(c) 'highly exposed air crew' and 'milliSievert' have the same respective meanings as in article 42 of Council Directive 96/29/Euratom; and

(d) 'year' means any period of twelve months.

Fatigue of crew – EU-OPS operator's responsibilities

149 The operator of an EU-OPS aeroplane must not cause or permit that aeroplane to make a commercial air transport flight unless:

(a) the scheme for the regulation of flight times required under EU-OPS has been approved by the CAA; and

(b) the operator has taken all such steps as are reasonably practicable to ensure that the provisions of the scheme will be complied with in relation to every person flying in that aeroplane as a member of its crew.

(a) O.J. No. L 159, 29.6.96, p.1.

INTENTIONALLY LEFT BLANK

PART 21 DOCUMENTS AND RECORDS

Documents to be carried

150 (1) An aircraft must not fly unless it carries the documents which it is required to carry under the law of the country in which it is registered.

(2) Subject to paragraphs (3) and (4), an aircraft registered in the United Kingdom must, when in flight, carry documents in accordance with Schedule 9.

(3) Paragraph (2) does not apply to an EU-OPS aeroplane flying on a commercial air transport flight.

(4) If a flight is intended to begin and end at the same aerodrome and does not include passage over the territory of any country other than the United Kingdom, the documents may be kept at that aerodrome instead of being carried in the aircraft.

Keeping and production of records of exposure to cosmic radiation

151 (1) A relevant undertaking must keep a record for the period and in the manner prescribed of the exposure to cosmic radiation of air crew assessed under article 148 and the names of the air crew concerned.

(2) A relevant undertaking must, within a reasonable period after being requested to do so by an authorised person, cause to be produced to that person the record required to be kept under paragraph (1).

(3) A relevant undertaking must, within a reasonable period after being requested to do so by a person for whom a record is required to be kept under paragraph (1), supply a copy of that record to that person.

(4) In this article 'air crew' and 'undertaking' have the same meaning as in article 148(5).

Use of flight recording systems

152 (1) On a flight on which a flight data recorder, a cockpit voice recorder or a combined cockpit voice recorder/flight data recorder is required by paragraph 4(4), (5), (6) or (7) of Schedule 4 to be carried in an aeroplane, the recorder must always be in use from the beginning of the take-off run to the end of the landing run.

(2) On any flight on which a cockpit voice recorder, a flight data recorder or a combined cockpit voice recorder/flight data recorder is required by paragraph 4(16) of Schedule 4 to be carried in a helicopter, the recorder must always be in use from the time the rotors first turn for the purpose of taking off until the rotors are next stopped.

Preservation of records of aeroplane flight data recorder

153 (1) Subject to article 159, the operator of an aeroplane must at all times:

(a) preserve the last 25 hours of recording made by any flight data recorder which must by or under this Order be carried in an aeroplane; and

(b) preserve a record of at least one representative flight made within the last 12 months.

(2) The representative flight referred to in paragraph (1)(b) must include a take-off, climb, cruise, descent, approach to landing and landing.

(3) The record required by paragraph (1)(b) must include a means of identifying the flight to which it relates.

(4) The operator of an aeroplane must preserve the records required by this article for such period as the CAA may direct.

Preservation of records of helicopter flight data recorder

154 (1) This article applies to a helicopter required to carry a flight data recorder specified in paragraph (1) or (2) of Scale SS of paragraph 5 of Schedule 4.

(2) Subject to article 159, the operator of such a helicopter must at all times preserve the last eight hours of recording made by the flight data recorder.

Preservation of records of helicopter cockpit voice recorder/flight data recorder

155 (1) This article applies to any helicopter required to carry a combined cockpit voice recorder/flight data recorder specified in paragraph (3) of Scale SS of paragraph 5 of Schedule 4.

(2) Subject to article 159, the operator of a helicopter must at all times preserve either the last eight hours of recording made by the combined cockpit voice recorder/flight data recorder or the recording specified in paragraph (3).

(3) The recording referred to in paragraph (2) is:

(a) the last five hours of recording or the duration of the last flight, whichever is the greater; and

(b) an additional period of recording in accordance with paragraph (4) and which together with the period preserved under sub-paragraph (a) amounts to eight hours.

(4) The additional period of recording referred to in paragraph (3) is:

(a) the period immediately preceding the period preserved under paragraph (3)(a); or

(b) such period or periods as the CAA may permit in any particular case or class of cases or generally.

(5) The additional recording specified in paragraph (4) must be retained in accordance with arrangements approved by the CAA.

Production of documents and records

156 (1) The commander of an aircraft must, within a reasonable time after being requested to do so by an authorised person, cause to be produced to that person:

(a) the certificates of registration and airworthiness in force for the aircraft;

(b) the licences of its flight crew; and

(c) any other documents which the aircraft is required by article 150 to carry when in flight.

(2) The operator of an aircraft registered in the United Kingdom must, within a reasonable time after being requested to do so by an authorised person, cause to be produced to that person any of the documents or records specified in paragraph (3) which have been requested by that person.

(3) The documents and records referred to in paragraph (2) are:

(a) the documents referred to in Schedule 9 as Documents A, B and G;

(b) the aircraft log book, engine log books and variable pitch propeller log books required under this Order to be kept;

(c) the weight schedule, if any, required to be preserved under article 35(5);

(d) in the case of a public transport aircraft or aerial work aircraft, the documents referred to in Schedule 9 as Documents D, E, F and H;

(e) the records of flight times, duty periods and rest periods which the operator is required by article 145(4) to preserve, and such other documents and information in the possession or control of the operator, as the authorised person may require for the purpose of determining whether those records are complete and accurate;

(f) any operations manuals required to be made available under article 83(4)(a); and

(g) the record made by any flight data recorder required to be carried by or under this Order.

* (4) The holder of a licence granted or rendered valid under this Order or by the CAA under the EASA Aircrew Regulation or of a medical certificate required under article 72 or article 72B or of a medical declaration under article 73 must, within a reasonable time after being requested to do so by an authorised person, cause the licence, including any * certificate of validation issued under article 78, the medical certificate or the medical declaration to be produced to that person.

(5) During the period of two years beginning with the date of the last entry in it every * person required by article 79 to keep a personal flying log must cause it to be produced to an authorised person within a reasonable time after being requested to do so by that person.

Production of air traffic service equipment documents and records

157 The holder of an approval under article 205 or 206 must, within a reasonable time after being requested to do so by an authorised person, cause to be produced to that person any documents and records relating to any air traffic service equipment used or intended to be used in connection with the provision of a service to an aircraft.

Power to inspect and copy documents and records

* **158** An authorised person has the power to inspect and copy any certificate, licence, log, declaration, document or record which the authorised person has the power under this Order, under any regulations made under this Order or under EU-OPS to require to be produced.

Preservation of documents, etc.

159 (1) A person who is required by this Order to preserve any document or record by reason of being the operator of an aircraft is in this article called 'the first operator'.

(2) Subject to paragraph (3), if the first operator ceases to be the operator of an aircraft, they must continue to preserve the document or record until paragraph (4) has been complied with.

(3) In the event of the death of the first operator the duty to preserve the document or record falls on the first operator's personal representative.

(4) If another person becomes the operator of the aircraft, the first operator or their personal representative must deliver to that other person on demand:

(a) the certificates of maintenance review and release to service;

(b) the log books;

(c) the weight schedule; and

* SI 2012/1751

(d) any record made by a flight data recorder and preserved in accordance with article 154(2) and 155(2),

which are in force or required to be preserved for that aircraft.

(5) If an engine or variable pitch propeller is removed from an aircraft and installed in another aircraft operated by another person, the first operator of the aircraft or their personal representative must deliver to that other person on demand the log book relating to that engine or propeller.

(6) If any person for whom a record has been kept by the first operator in accordance with article 146(4) becomes a member of the flight crew of a public transport aircraft registered in the United Kingdom and operated by another person, the first operator or their personal representative must deliver those records to that other person on demand.

(7) It is the duty of the other person referred to in paragraphs (4), (5) and (6) to deal with the documents or records delivered under those provisions as if they were the first operator.

PART 22 AIRCRAFT IN FLIGHT

Rules of the Air

160 (1) The Secretary of State may make regulations (in this article called the 'Rules of the Air') prescribing:

(a) the manner in which aircraft may move or fly including in particular provision for requiring aircraft to give way to military aircraft;

(b) the lights and other signals to be shown or made by aircraft or persons;

(c) the lighting and marking of aerodromes; and

(d) any other provisions for securing the safety of aircraft in flight and in movement and the safety of persons and property on the surface.

(2) Subject to paragraphs (3) and (4), it is an offence to contravene, to permit the contravention of, or to fail to comply with, the Rules of the Air.

(3) It is lawful for the Rules of the Air to be departed from to the extent necessary:

(a) for avoiding immediate danger;

(b) for complying with the law of any country other than the United Kingdom within which the aircraft then is; or

(c) for complying with Military Flying Regulations (Joint Service Publication 550) or Flying Orders to Contractors (Aviation Publication 67) issued by the Secretary of State.

(4) It is lawful for the Rules of the Air to be departed from by an aircraft of which the commander is acting as such in the course of the commander's duty as a member of any of Her Majesty's naval, military or air forces.

(5) If any departure from the Rules of the Air is made for the purpose of avoiding immediate danger, the commander of the aircraft must cause written detailed information about the departure, and of the circumstances giving rise to it, to be given within 10 days of the departure to the competent authority of the country in whose territory the departure was made or if the departure was made over the high seas, to the CAA.

(6) Nothing in the Rules of the Air exonerates any person from the consequences of any neglect in the use of lights or signals or of the neglect of any precautions required by ordinary aviation practice or by the special circumstances of the case.

Power to prohibit or restrict flying

161 (1) If the Secretary of State decides it is necessary in the public interest to restrict or prohibit flying by reason of:

(a) the intended gathering or movement of a large number of persons;

(b) the intended holding of an aircraft race or contest or of a flying display; or

(c) national defence or any other reason affecting the public interest,

the Secretary of State may make regulations prohibiting, restricting or imposing conditions on flights by aircraft specified in paragraph (2) flying in the circumstances specified in paragraph (2).

(2) The aircraft and circumstances are:

(a) aircraft, whether or not they are registered in the United Kingdom, in any airspace over the United Kingdom or in the neighbourhood of an offshore installation; and

(b) aircraft which are registered in the United Kingdom, in any other airspace, being airspace for which the United Kingdom has, under international arrangements, undertaken to provide navigation services for aircraft.

(3) Regulations made under this article may apply either generally or in relation to any class of aircraft.

(4) It is an offence to contravene, permit the contravention of or fail to comply with any regulations made under this article.

(5) If the commander of an aircraft becomes aware that the aircraft is flying in contravention of any regulations which have been made for any reason referred to in paragraph (1)(c) the commander must, unless otherwise instructed under paragraph (6), cause the aircraft to leave the area to which the regulations relate by flying to the least possible extent over such area and the aircraft must not begin to descend while over such an area.

(6) The commander of an aircraft flying either within an area for which regulations have been made for any reason referred to in paragraph (1)(c) or within airspace notified as a Danger Area must immediately comply with instructions given by radio by the appropriate air traffic control unit or by, or on behalf of, the person responsible for safety within the relevant airspace.

Flying displays

162 (1) Subject to paragraphs (15), (16) and (18), no person may act as the organiser of a flying display (in this article referred to as 'the flying display director') without first obtaining the permission of the CAA for that flying display.

(2) Subject to paragraphs (16) and (18), the commander of an aircraft who is intending to participate in a flying display must take all reasonable steps to be satisfied, before participating, that:

(a) the flying display director has been granted an appropriate permission under paragraph (6);

(b) the intended flight can comply with any relevant conditions subject to which that permission may have been granted; and

(c) the pilot has been granted an appropriate pilot display authorisation.

(3) Subject to paragraphs (16) and (18), the commander of an aircraft who is participating in a flying display for which a permission has been granted must comply with any conditions subject to which that permission may have been granted.

(4) Subject to paragraphs (16) and (18), a person acting as pilot of an aircraft participating in a flying display must hold an appropriate pilot display authorisation and comply with any conditions subject to which the authorisation may have been given.

(5) Subject to paragraphs (16) and (18), the flying display director must not permit any person to act as pilot of an aircraft which participates in a flying display unless such person holds an appropriate pilot display authorisation.

(6) The CAA must grant a permission required by paragraph (1) if it is satisfied that the applicant is fit and competent to safely organise the proposed flying display, having regard in particular to the applicant's:

(a) previous conduct and experience; and

(b) organisation, staffing and other arrangements.

(7) The CAA may grant such a permission subject to such conditions, which may include conditions concerning military aircraft, as the CAA thinks fit.

(8) The CAA must, for the purposes of this article, grant a pilot display authorisation authorising the holder to act as pilot of an aircraft taking part in a flying display if it is satisfied that the applicant is:

(a) a fit person to hold the authorisation; and

(b) is qualified by having the knowledge, experience, competence, skill, physical and mental fitness to fly in accordance with the authorisation.

(9) For the purposes of paragraph (8) the applicant must supply such evidence and undergo such examinations and tests as the CAA may require.

(10) The CAA may authorise a person to conduct such examinations or tests for the purposes of this article as it may specify.

(11) Subject to article 228, a pilot display authorisation granted in accordance with this article remains in force for the period indicated in the authorisation.

(12) Subject to paragraph (13), for the purposes of this article, an appropriate pilot display authorisation means an authorisation which is valid and appropriate to the intended flight and which has been:

(a) granted by the CAA under paragraph (8); or

(b) granted by the competent authority of a JAA Full Member State.

(13) A pilot display authorisation granted by the competent authority of a JAA Full Member State is not an appropriate pilot display authorisation for the purposes of this article if the CAA has given a direction to that effect.

(14) A direction may be issued under paragraph (13) either for a particular authorisation, a specified category of authorisations or generally.

(15) Paragraph (1) does not apply to:

(a) a flying display which takes place at an aerodrome in the occupation of the Ministry of Defence or of any visiting force or any other premises in the occupation or under the control of the Ministry of Defence; or

(b) a flying display at which the only participating aircraft are military aircraft.

(16) Paragraphs (1), (2), (3), (4) and (5) do not apply to a flying display at which the only participating aircraft are balloons.

(17) Subject to paragraph (18), the flying display director must not permit any military aircraft to participate in a flying display unless the director complies with any conditions concerning military aircraft subject to which the permission for the flying display may have been granted.

(18) Nothing in this article applies to an aircraft race or contest or to an aircraft taking part in such a race or contest or to the commander or pilot whether or not such race or contest is held in association with a flying display.

Balloons

163 (1) This article applies to or in relation to balloons within the United Kingdom.

(2) A balloon in captive or tethered flight must not be flown within 60 metres of any vessel, vehicle or structure except with the permission of the person in charge of any such vessel, vehicle or structure.

(3) Except with the permission of the CAA:

(a) a balloon in captive flight must not be flown within the aerodrome traffic zone of a notified aerodrome during the notified operating hours of that aerodrome; and

(b) a balloon in captive or tethered flight must not be flown at a height measured to the top of the balloon of more than 60 metres above ground level.

(4) Except with the permission of the CAA, an uncontrollable balloon in captive or released flight must not be flown in airspace notified for the purposes of this paragraph.

(5) Except during the day and in Visual Meteorological Conditions, a controllable balloon must not be flown in free controlled flight:

(a) within airspace notified for the purposes of this paragraph; or

(b) within the aerodrome traffic zone of a notified aerodrome during the notified operating hours of that aerodrome.

(6) Except with the permission of the appropriate air traffic control unit, a controllable balloon must not be flown in tethered flight:

(a) within airspace notified for the purposes of this paragraph; or

(b) within the aerodrome traffic zone of a notified aerodrome.

(7) When in captive flight, a balloon must be securely moored and must not be left unattended unless it is fitted with a device which ensures its automatic deflation if it breaks free of its moorings.

(8) A person must not cause or permit:

(a) a group of small balloons of more than 1000 in number to be simultaneously released at a single site wholly or partly within the aerodrome traffic zone of a notified aerodrome during the notified operating hours of that aerodrome unless that person has given to the CAA at least 28 days previous notice in writing of the release;

(b) a group of small balloons of more than 2000 but not more than 10,000 in number to be simultaneously released at a single site:

(i) within airspace notified for the purposes of this sub-paragraph; or

(ii) within the aerodrome traffic zone of a notified aerodrome during the notified operating hours of that aerodrome,

except with the permission of the CAA; and

(c) a group of small balloons greater than 10,000 in number to be simultaneously released at a single site except with the permission of the CAA.

(9) In this article:

(a) 'day' means the time from half an hour before sunrise until half an hour after sunset (both times exclusive), sunset and sunrise being determined at surface level; and

(b) 'simultaneously released at a single site' means the release of a specified number of balloons during a period of not more than 15 minutes from within an area not more than 1 km square.

Gliders, kites and parascending parachutes

164 (1) This article applies to gliders, kites and parascending parachutes within the United Kingdom.

(2) Except with the permission of the CAA:

(a) a glider or parascending parachute must not be launched by winch and cable or by ground tow to a height of more than 60 metres above ground level;

(b) a kite must not be flown at a height of more than 30 metres above ground level within the aerodrome traffic zone of a notified aerodrome during the notified operating hours of that aerodrome;

(c) a kite must not be flown at a height of more than 60 metres above ground level; and

(d) a parascending parachute must not be launched by winch and cable or by ground tow within the aerodrome traffic zone of a notified aerodrome during the notified operating hours of that aerodrome.

Airships

165 (1) This article applies to airships within the United Kingdom.

(2) An airship with a capacity of more than 3000 cubic metres must not be moored other than on a notified aerodrome except with the permission of the CAA.

(3) An airship with a capacity of 3000 cubic metres or less must not be moored within 2 km of a congested area or within the aerodrome traffic zone of a notified aerodrome unless:

(a) it is moored on a notified aerodrome; or

(b) it has the permission of the CAA.

(4) An airship when moored in the open must be securely moored and must not be left unattended.

Small unmanned aircraft

166 (1) A person must not cause or permit any article or animal (whether or not attached to a parachute) to be dropped from a small unmanned aircraft so as to endanger persons or property.

(2) The person in charge of a small unmanned aircraft may only fly the aircraft if reasonably satisfied that the flight can safely be made.

(3) The person in charge of a small unmanned aircraft must maintain direct, unaided visual contact with the aircraft sufficient to monitor its flight path in relation to other aircraft, persons, vehicles, vessels and structures for the purpose of avoiding collisions.

(4) The person in charge of a small unmanned aircraft which has a mass of more than 7kg excluding its fuel but including any articles or equipment installed in or attached to the aircraft at the commencement of its flight, must not fly the aircraft:

(a) in Class A, C, D or E airspace unless the permission of the appropriate air traffic control unit has been obtained;

(b) within an aerodrome traffic zone during the notified hours of watch of the air traffic control unit (if any) at that aerodrome unless the permission of any such air traffic control unit has been obtained; or

(c) at a height of more than 400 feet above the surface unless it is flying in airspace described in sub-paragraph (a) or (b) and in accordance with the requirements for that airspace.

(5) The person in charge of a small unmanned aircraft must not fly the aircraft for the purposes of aerial work except in accordance with a permission granted by the CAA.

Small unmanned surveillance aircraft

167 (1) The person in charge of a small unmanned surveillance aircraft must not fly the aircraft in any of the circumstances described in paragraph (2) except in accordance with a permission issued by the CAA.

(2) The circumstances referred to in paragraph (1) are:

(a) over or within 150 metres of any congested area;

(b) over or within 150 metres of an organised open-air assembly of more than 1,000 persons;

(c) within 50 metres of any vessel, vehicle or structure which is not under the control of the person in charge of the aircraft; or

(d) subject to paragraphs (3) and (4), within 50 metres of any person.

(3) Subject to paragraph (4), during take-off or landing, a small unmanned surveillance aircraft must not be flown within 30 metres of any person.

(4) Paragraphs (2)(d) and (3) do not apply to the person in charge of the small unmanned surveillance aircraft or a person under the control of the person in charge of the aircraft.

(5) In this article 'a small unmanned surveillance aircraft' means a small unmanned aircraft which is equipped to undertake any form of surveillance or data acquisition.

Rockets

168 (1) Subject to paragraph (2), this article applies to:

(a) small rockets of which the total impulse of the motor or combination of motors exceeds 160 Newton-seconds; and

(b) large rockets.

(2) This article does not apply to:

(a) an activity to which the Outer Space Act 1986[(a)] applies; or

(b) a military rocket.

(3) No person may launch a small rocket unless the conditions in paragraph (4), and any of the conditions in paragraphs (5), (6) and (7) which are applicable, are satisfied.

(4) The person launching the rocket is satisfied on reasonable grounds that:

(a) the flight can be safely made; and

(b) the airspace within which the flight will take place is, and will throughout the flight remain, clear of any obstructions including any aircraft in flight.

(5) The person launching the rocket on a flight within controlled airspace has obtained the permission of the appropriate air traffic control unit for aircraft flying in that airspace.

(a) 1986 c.38.

(6) The person launching the rocket on a flight within an aerodrome traffic zone of an aerodrome during its notified operating hours:

(a) has obtained the permission of the air traffic control unit at the aerodrome; or

(b) if there is no air traffic control unit, has obtained from the aerodrome flight information service unit at that aerodrome information to enable the flight within the zone to be conducted safely; or

(c) if there is no air traffic control unit and no aerodrome flight information service unit, has obtained information from the air/ground communications service unit at that aerodrome to enable the flight to be conducted safely.

(7) A flight for aerial work purposes must be carried out under and in accordance with a permission granted by the CAA to the person launching the rocket.

(8) A flight by a large rocket must be carried out under and in accordance with a permission granted by the CAA to the person launching the rocket.

INTENTIONALLY LEFT BLANK

PART 23 AIR TRAFFIC SERVICES

Requirement for an air traffic control approval

* **169** (1) Subject to paragraph (3), a person in charge of the provision of an air traffic control service must not provide such a service for United Kingdom airspace or airspace outside the United Kingdom for which the United Kingdom has, under international arrangements, undertaken to provide air navigation services unless that person has been given and complies with the terms of an air traffic control approval granted by the CAA.

(2) The CAA must grant an air traffic control approval if it is satisfied that the applicant is competent to provide a service which is safe for use by aircraft, having regard to the applicant's organisation, staffing, equipment, maintenance and other arrangements.

* (3) Paragraph (1) does not apply to any person who is required to be certified under article 7 of the Service Provision Regulation.

Duty of person in charge to satisfy himself as to competence of controllers

170 The holder of an approval granted under article 169 must not permit any person to act as an air traffic controller or a student air traffic controller in the provision of the service under the approval unless:

(a) that person holds an appropriate licence; and

(b) the approval holder is satisfied that the person is competent to perform the duties of an air traffic controller or a student air traffic controller.

Manual of air traffic services

* **171** (1) Subject to paragraph (2), a person must not provide an air traffic control service at any place unless:

(a) the service is provided in accordance with the standards and procedures specified in a manual of air traffic services for that place;

(b) the manual is produced to the CAA within a reasonable time after a request for its production is made by the CAA; and

(c) such amendments or additions are made to the manual as the CAA may from time to time require.

* (2) Paragraph (1) does not apply to any person who is required to be certified under article 7 of the Service Provision Regulation.

Provision of air traffic services

172 In the case of an aerodrome (other than a Government aerodrome) for which there is equipment for providing aid for holding, aid for let-down or aid for an approach to landing by radio or radar, the person in charge of the aerodrome must:

(a) inform the CAA in advance of the periods during and times at which any such equipment is to be in operation for the purpose of providing such aid as is specified by that person; and

(b) during any period and at such times as are notified, cause an approach control service to be provided.

* SI 2012/1751

Making of an air traffic direction in the interests of safety

173 (1) The CAA may, in the interests of safety, direct the person in charge of an aerodrome that there must be provided for that aerodrome (other than a Government aerodrome) such an air traffic control service, a flight information service or a means of two way radio communication as the CAA considers appropriate.

(2) The CAA may, in the interests of safety, direct the holder of a licence to provide air traffic services granted under Part I of the Transport Act 2000[(a)] that there must be provided, for airspace specified in paragraph (3), such an air traffic control service, a flight information service or a means of two way radio communication as the CAA considers appropriate.

(3) The airspace referred to in paragraph (2) is United Kingdom airspace or airspace outside the United Kingdom for which the United Kingdom has, under international arrangements, undertaken to provide air navigation services, otherwise than in respect of an aerodrome.

(4) The CAA may specify in the direction the periods during which, the times at which, the manner in which and the airspace within which such service or such means must be provided.

(5) The person who has been directed must cause such a service or means to be provided in accordance with the direction.

(6) The CAA may, pending inquiry into or consideration of the case, make a provisional air traffic direction.

(7) A provisional air traffic direction:

(a) may contain any of the requirements which may be included in an air traffic direction made in accordance with paragraph (1) or (2);

(b) has effect as though it were an air traffic direction made in accordance with paragraph (1) or (2).

Making of a direction for airspace policy purposes

174 (1) After consultation with the Secretary of State the CAA may direct any person in charge of the provision of air traffic services to provide air traffic services for United Kingdom airspace or airspace outside the United Kingdom for which the United Kingdom has, under international arrangements, undertaken to provide air traffic services.

(2) A direction under paragraph (1) may be made:

(a) in the interests of ensuring the efficient use of airspace; or

(b) to require that air traffic services are provided to a standard considered appropriate by the CAA for the airspace classification.

(3) The CAA may specify in a direction under paragraph (1):

(a) the air traffic services and the standard to which they are to be provided; and

(b) the periods during which, the times at which, the manner in which, and the airspace within which such services must be provided.

(4) The person who has been directed must cause such a service to be provided in accordance with the direction.

(a) 2000 c.38.

Use of radio call signs at aerodromes

175 The person in charge of an aerodrome provided with means of two-way radio communication must not cause or permit any call sign to be used for a purpose other than a purpose for which that call sign has been notified.

Approval of instrument flight procedures

176 (1) An instrument flight procedure within the United Kingdom must not be notified unless that procedure has been designed or approved by the CAA.

(2) The CAA must not notify or approve an instrument flight procedure unless it is satisfied that the procedure is safe for use by aircraft.

(3) Subject to paragraph (5), the CAA may approve an instrument flight procedure where an application for approval of the procedure has been made.

(4) An applicant for approval of an instrument flight procedure must supply such evidence and reports as the CAA may require.

(5) The CAA is not obliged to accept an application for the approval of an instrument flight procedure where that application is not supported by a report submitted by a person approved under paragraph (6).

(6) The CAA must grant an approval to submit reports supporting an application for approval of an instrument flight procedure if it is satisfied that the applicant is competent having regard to the applicant's organisation, staffing, equipment, knowledge, experience, competence, skill and other arrangements to design an instrument flight procedure that is safe for use by aircraft.

(7) The applicant for an approval under paragraph (6) must supply such evidence and undergo such examinations and tests and undertake such courses of training as the CAA may require.

(8) For the purpose of this article, the CAA may subject to such conditions as it thinks fit:

(a) approve any course of training;

(b) authorise a person to conduct such examinations or tests as it may specify; and

(c) approve a person to provide any course of training.

INTENTIONALLY LEFT BLANK

PART 24 LICENSING OF AIR TRAFFIC CONTROLLERS

* **Prohibition of unlicensed student air traffic controllers and air traffic controllers**

177 (1) A person must not provide air traffic control services unless authorised to do so in accordance with either a student air traffic controller licence or an air traffic controller licence specified in paragraph (4).

(2) A person must not provide air traffic control services in the North Atlantic Shanwick Oceanic Control Area unless that person holds either a student air traffic controller licence or an air traffic controller licence specified in paragraph (4) which contains:

(a) an Area Control Surveillance Rating and an Oceanic Control endorsement; or

(b) an Area Control Procedural Rating and an Oceanic Control endorsement.

(3) A person must not hold himself or herself out, whether by use of a radio call sign or in any other way, as a person who may provide air traffic control services unless authorised to do so in accordance with either a student air traffic controller licence or an air traffic controller licence specified in paragraph (4).

(4) A student air traffic controller licence or air traffic controller licence referred to in paragraphs (1), (2) and (3) is a licence issued under the EASA Air Traffic Controller Licensing Regulation by a competent authority of the United Kingdom or a licence issued under the EASA Air Traffic Controller Licensing Regulation by a Member State other than the United Kingdom.

178 to 184 deleted

Period for which a student air traffic controller licence remains in force

185 Unless suspended or revoked under Article 6 of the EASA Air Traffic Controller Licensing Regulation, a student air traffic controller licence remains in force for the period specified in the licence which shall not exceed two years.

Inclusion of national endorsements

186A (1) The CAA may include in an Approach Control Surveillance Rating contained in an air traffic controller licence, in addition to any rating endorsement specified in article 11 of the EASA Air Traffic Controller Licensing Regulation, any of the following rating endorsements:

(a) an Offshore Rating Endorsement, which entitles the holder of a Radar Endorsement to provide an offshore service;

(b) a Special Tasks Rating Endorsement, which entitles the holder of a Radar Endorsement or an Automatic Dependent Surveillance Endorsement to provide a special tasks service.

(2) The CAA may include in an Area Control Surveillance Rating contained in an air traffic controller licence, in addition to any rating endorsement specified in article 11 of the EASA Air Traffic Controller Licensing Regulation, any of the following rating endorsements:

(a) an Offshore Rating Endorsement, which entitles the holder of a Radar Endorsement to provide an offshore service;

* SI 2012/1751

* (b) a Special Tasks Rating Endorsement, which entitles the holder of a Radar Endorsement or an Automatic Dependent Surveillance Endorsement to provide a special tasks service.

(3) The CAA may include in an Area Control Procedural Rating contained in an air traffic controller licence an Oceanic Control Endorsement which entitles the holder to provide air traffic control services to aircraft operating in an Oceanic Control Area.

186 to 192 deleted

Fatigue of air traffic controllers

* **193** A person must not exercise the privileges of a student air traffic controller licence or an air traffic controller licence if they know or suspect that they are suffering from or, having regard to the circumstances of the period of duty to be undertaken, are likely to suffer from, such fatigue as may endanger the safety of any aircraft to which an air traffic control service may be provided.

* **Acting under the influence of psychoactive substances or medicines**

194 A person must not exercise the privileges of a student air traffic controller licence or an air traffic controller licence whilst under the influence of any psychoactive substance or medicines which might render them unable to exercise the privileges of their licence safely and properly.

Failing exams, assessments or tests

195 A person who, when last examined, assessed or tested for the purposes of this Part, failed that examination, assessment or test must not act in the capacity for which that examination, assessment or test would have qualified them had it been passed.

* **Use and approval of simulators**

196 (1) No part of any examination, assessment or test undertaken for the purposes of the EASA Air Traffic Controller Licensing Regulation may be undertaken in a simulator unless that simulator has been approved for the purpose by the CAA.

(2) The CAA must approve a simulator for the purposes of paragraph (1) if it is satisfied that it is fit for its intended purpose.

Approval of courses, persons and simulators

197 Without prejudice to any other provision of this Order the CAA may, for the purposes of this Part, approve:

(a) any course of training or instruction;

(b) any unit training plan or unit competence scheme;

(c) a person to conduct such examinations, assessments or tests as it may specify; and

(d) a simulator.

* **Certification of training organisations and mutual recognition of training certificates**

198 A person must not provide training necessary to obtain from the CAA student air traffic controller licences or air traffic controller licences or any associated rating or endorsement or to maintain any of them unless:

* SI 2012/1751

* (a) that person holds training organisation certification issued or recognised by the CAA in accordance with the EASA Air Traffic Controller Licensing Regulation; and

(b) the training has been approved by the CAA in accordance with Article 22(2)(d) of the EASA Air Traffic Controller Licensing Regulation.

Certified training organisation: production of records

199 A certified training organisation must, within a reasonable time of being requested to do so by an authorised person, produce to that person any record or document (whether or not in electronic form) which that person may require for the purpose of determining whether the certified training organisation fulfils the requirements set out in Chapter IV of the EASA Air Traffic Controller Licensing Regulation as amended from time to time.

*

200 deleted

Meaning of terms used in this Part

201 Terms used in this Part have the same meaning as equivalent terms used in the EASA Air Traffic Controller Licensing Regulation as amended from time to time.

SI 2012/1751

INTENTIONALLY LEFT BLANK

PART 25 FLIGHT INFORMATION SERVICES AND LICENSING OF FLIGHT INFORMATION SERVICE OFFICERS

Prohibition of unlicensed flight information service officers

202 (1) A person must not act as a flight information service officer at any aerodrome or area control centre or hold himself or herself out, whether by use of a radio call sign or in any other way, as a person who may so act unless:

(a) they hold and comply with the terms of a flight information service officer's licence granted under this Order authorising the holder to act as such an officer at that aerodrome or area control centre; and

(b) they have identified themselves in such a manner as may be notified.

(2) In this Part 'acting as a flight information service officer' means giving a flight information service.

Licensing of flight information service officers

203 (1) The CAA must grant a flight information service officer licence to any person aged 18 years or more if it is satisfied that the applicant:

(a) is a fit person to hold the licence; and

(b) is qualified by having the knowledge, experience, competence, skill and physical and mental fitness to act in the capacity to which the licence relates.

(2) The applicant must supply such evidence and undergo such examinations and tests and undertake such courses of training as the CAA may require.

(3) The licence may be issued subject to such conditions as the CAA thinks fit.

(4) A licence to act as a flight information service officer:

(a) may be renewed by the CAA from time to time, when it is satisfied that the applicant is a fit person and is qualified in accordance with paragraph (1);

(b) remains in force, subject to article 228, for the period indicated in the licence or if no period is indicated, for the lifetime of the holder.

(5) A flight information service officer's licence does not authorise the giving of a flight information service at an aerodrome or area control centre unless:

(a) that aerodrome or area control centre has been specified in the licence by a person authorised by the CAA for the purpose; and

(b) the licence has been validated for that aerodrome or area control centre by a person authorised for the purpose by the CAA.

(6) If, throughout any period of 90 days, the holder of the licence has not at any time given such a service at a particular aerodrome or area control centre, the licence ceases to be valid for that aerodrome or area control centre at the end of that period until the licence has been revalidated for that aerodrome or area control centre by a person authorised by the CAA for the purpose.

(7) A licence to act as a flight information service officer is not valid unless it has been signed by the holder in ink or indelible pencil.

(8) Every holder of a flight information service officer's licence must, on such occasions as the CAA may require, submit to such examinations and tests and supply such evidence of the holder's knowledge, experience, competence and skill and undergo such courses of training as the CAA may require.

Flight information service manual

* **204** (1) Subject to paragraph (2), a person must not provide a flight information service at any aerodrome or area control centre unless:

(a) the service is provided in accordance with the standards and procedures specified in a flight information service manual for that aerodrome or area control centre;

(b) the manual is produced to the CAA within a reasonable time after a request for its production is made by the CAA; and

(c) such amendments or additions have been made to the manual as the CAA may from time to time require.

* (2) Paragraph (1) does not apply to any person who is required to be certified under article 7 of the Service Provision Regulation.

SI 2012/1751

* **PART 25A CERTIFICATE OF COMPETENCE TO OPERATE AN AERONAUTICAL RADIO STATION**

Prohibition of unauthorised operation of an aeronautical radio station

204A (1) Subject to paragraph (3), a person must not operate an aeronautical radio station for a purpose specified in paragraph (4), or hold himself or herself out, whether by use of a radio call sign or in any other way, as one who may do so unless that person:

(a) held on 9th August 2012 an Air Ground Communication Service Radio Operator's Certificate of Competence or an Offshore Communication Service Radio Operator's Certificate of Competence issued by the CAA; or

(b) holds and complies with the terms of an aeronautical radio station operator certificate of competence granted under article 204B authorising the holder to provide such a service.

(2) In this article 'operate an aeronautical radio station' means activate or alter any of the external controls of any of the apparatus comprised in the station or transmit or receive messages.

(3) Nothing in this article prevents a person operating an aeronautical radio station for the purpose of avoiding immediate danger.

(4) The purposes specified for the purpose of paragraph (1) are to provide:

(a) an air/ground communications service;

(b) a service to give information to pilots of aircraft flying to or from offshore installations and for other aircraft operating in the vicinity of these aircraft; or

(c) a service to give information to pilots of aircraft flying for the purpose of the dropping of persons by parachute and to persons who have been dropped by parachute.

Aeronautical radio station operator certificate of competence

204B (1) The CAA must grant an aeronautical radio station certificate of competence if it is satisfied that the applicant:

(a) is at least 18 years of age; and

(b) is qualified by having the knowledge, experience and skill to act in the capacity to which the certificate of competence relates.

(2) The applicant must supply such evidence and undergo such examinations and tests and undertake such courses of training as the CAA may require.

(3) An aeronautical radio station certificate of competence—

(a) remains in force, subject to article 228, for the period indicated in the certificate or if no period is indicated, for the lifetime of the holder; and

(b) may be renewed by the CAA from time to time, if it is satisfied that the applicant is qualified in accordance with paragraph (1).

(4) An aeronautical radio station operator certificate of competence does not authorise the holder to provide a service at an aerodrome unless the certificate has been endorsed by the person in charge of the aeronautical radio station at the aerodrome in accordance with paragraph (5).

SI 2012/1751

*

(5) An endorsement is in accordance with this paragraph if it certifies that the person in charge of the aeronautical radio station at the aerodrome is satisfied that the holder of the certificate is familiar with the terms and conditions of the wireless telegraphy licence issued under the Wireless Telegraphy Act 2006[(a)] for the aeronautical radio station and has been informed of any relevant operational information concerning the types of equipment and operating procedures for the station

(6) Every holder of an aeronautical radio station operator certificate of competence must, on such occasions as the CAA may require, submit to such examinations and tests, supply such evidence of the holder's knowledge, experience, competence and skill and undergo such courses of training as the CAA may require.

(7) Nothing in this Order obliges the CAA to accept an application for the issue, variation or renewal of an aeronautical radio station operator certificate of competence if the application is not supported by such reports from such persons approved under article 244 as the CAA may specify, either generally or in a particular case or class of cases.

Approval of courses, persons, examinations and simulators

204C Without prejudice to any other provision of this Order the CAA may, for the purposes of this Part, approve:

(a) any course of training or instruction;

(b) a person to conduct such examinations, assessments or tests as it may specify; and

(c) any examinations, assessments or tests.

(a) 2006 c.36.

SI 2012/1751

PART 26 AIR TRAFFIC SERVICE EQUIPMENT

Air traffic service equipment

205 (1) A person must not cause or permit any air traffic service equipment to be established or used in the United Kingdom otherwise than under and in accordance with an approval granted by the CAA to the person in charge of the equipment.

(2) An approval must be granted under paragraph (1) if the CAA is satisfied:

(a) as to the intended purpose of the equipment;

(b) that the equipment is fit for its intended purpose; and

(c) that the person is competent to operate the equipment.

(3) The person in charge of an aeronautical radio station at an aerodrome for which a public use licence has been granted must cause to be notified in relation to that aeronautical radio station the type and availability of operation of any service which is available for use by any aircraft.

(4) An approval granted under paragraph (1) may include a condition requiring a person in charge of an aeronautical radio station at any other aerodrome or place to cause the information specified in paragraph (3) to be notified.

(5) An approval granted under paragraph (1) may include such other conditions as the CAA thinks fit including:

(a) a condition requiring the person in charge of the equipment to use a person approved by the CAA under paragraph (6) for the provision of particular services in connection with the equipment; and

(b) a condition requiring that the equipment be flight checked by such an approved person.

(6) The CAA may approve a person to provide particular services in connection with approved equipment.

(7) For the purpose of paragraphs (1) and (6) an approval may be granted for one or more persons or generally.

(8) This article does not apply to any air traffic service equipment of which the person solely in charge is the Secretary of State.

Air traffic service equipment records

206 (1) The person in charge of any air traffic service equipment and any associated apparatus required under paragraph (2) or (3) must:

(a) keep records for such equipment or apparatus in accordance with Part A of Schedule 11; and

(b) preserve such records for one year or such longer period as the CAA may in a particular case direct.

(2) The person in charge of an aeronautical radio station which is used for the provision of an air traffic control service by an air traffic control unit must provide recording apparatus in accordance with paragraph (4).

(3) The CAA may direct the person in charge of any other air traffic service equipment to provide recording apparatus in accordance with paragraph (4).

(4) Subject to paragraph (8), the person in charge of the air traffic service equipment for which recording apparatus is required to be provided under paragraph (2) or (3) must ensure that:

(a) when operated the apparatus is capable of recording and replaying the terms or content of any message or signal transmitted or received by or through that equipment; and

(b) in the case of an aeronautical radio station the apparatus is capable of recording and replaying the terms or content of any voice radio message or signal transmitted to an aircraft either alone or in common with other aircraft or received from an aircraft by the air traffic control unit.

(5) Subject to paragraph (8), the person in charge of the air traffic service equipment for which recording apparatus is required to be provided under paragraph (2) or (3) must:

(a) ensure that the apparatus is in operation at all times when the equipment is being used in connection with the provision of a service intended to facilitate the navigation of aircraft;

(b) ensure that each record made by the apparatus complies with Part B of Schedule 11;

(c) not cause or permit that apparatus to be used unless it is approved by the CAA; and

(d) comply with the terms of such an approval.

(6) In considering whether or not to grant an approval, the CAA may have regard to the matters specified in Part C of Schedule 11.

(7) An approval may be granted:

(a) in addition to any other conditions which may be imposed, subject to conditions relating to the matters to which the CAA may have had regard under paragraph (6); and

(b) for one or more persons or generally.

(8) If any apparatus provided in compliance with paragraph (2) or (3) ceases to be capable of recording the matters required by this article to be included in the records, the person required to provide that apparatus must ensure that, so far as practicable:

(a) a record is kept which complies with Part B of Schedule 11; and

(b) in the case of apparatus provided in compliance with paragraph (2), a summary of voice communications exchanged between the aeronautical radio station and any aircraft are recorded.

(9) If any apparatus provided in compliance with paragraph (2) or (3) becomes unserviceable, the person in charge of the air traffic service equipment must ensure that the apparatus is rendered serviceable again as soon as reasonably practicable.

(10) The person in charge of any air traffic service equipment must preserve any record made in compliance with paragraph (5) or (8) for 30 days from the date on which the terms or content of the message or signal were recorded or for such longer period as the CAA may in a particular case direct.

(11) A person required by this article to preserve any record by reason of being the person in charge of the air traffic service equipment is in this paragraph called 'the first person in charge'.

(12) If the first person in charge ceases to be in charge of the air traffic service equipment, they must continue to preserve the record until paragraph (14) is complied with.

(13) In the event of the death of the first person in charge, the duty to preserve the record falls on their personal representative.

(14) If another person becomes the person in charge of the air traffic service equipment, the first person in charge or their personal representative must deliver the record to that other person on demand, and it is the duty of that other person to deal with any such record as if they were the first person in charge.

(15) The person in charge of any air traffic service equipment must within a reasonable time after being requested to do so by an authorised person produce any record required to be preserved under this article to that authorised person.

(16) This article does not apply to any air traffic service equipment of which the person solely in charge is the Secretary of State.

INTENTIONALLY LEFT BLANK

PART 27 AERODROMES, AERONAUTICAL LIGHTS AND DANGEROUS LIGHTS

Requirement to use licensed or Government aerodrome

207 (1) This article applies to any aircraft flying on a flight specified in article 208.

(2) An aircraft to which this article applies must not take off or land at a place in the United Kingdom other than:

(a) an aerodrome licensed under this Order for the take-off and landing of such aircraft;

(b) a Government aerodrome notified as available for the take-off and landing of such aircraft; or

(c) a Government aerodrome where the person in charge of the aerodrome has given permission for the particular aircraft to take off or land.

(3) When taking off or landing at an aerodrome specified in paragraph (2), an aircraft to which this article applies must do so in accordance with any conditions subject to which the aerodrome may have been licensed or notified, or subject to which such permission may have been given.

Flights which must use licensed or Government aerodrome

208 (1) Subject to paragraph (5), article 207 applies to any aeroplane which has a maximum total weight authorised of more than 2730kg flying on a flight:

(a) for the purpose of the commercial air transport of passengers or the public transport of passengers;

(b) for the purpose of instruction in flying given to any person for the purpose of becoming qualified for the grant of a pilot's licence or the inclusion of an aircraft rating, a night rating or a night qualification in a licence; or

(c) for the purpose of carrying out flying tests for the grant of a pilot's licence or the inclusion of an aircraft rating or a night rating in a licence.

(2) Subject to paragraph (5), article 207 applies to any aeroplane which has a maximum total weight authorised of not more than 2730kg flying on a flight which is:

(a) a scheduled journey for the purpose of the commercial air transport of passengers or the public transport of passengers;

(b) for the purpose of the commercial air transport of passengers or the public transport of passengers and which begins and ends at the same aerodrome; or

* (c) deleted;

(d) deleted;

(e) for the purpose of the commercial air transport of passengers or the public transport of passengers and which is at night.

(3) Subject to paragraph (5), article 207 applies to any helicopter or gyroplane flying on a flight which is a scheduled journey for the purpose of the public transport of passengers:

*

(3A) Subject to paragraph (5), article 207 applies to any helicopter or gyroplane of which the maximum total weight authorised is more than 3175kg flying on a flight:

* (a) for the purpose of instruction in flying given to any person for the purpose of becoming qualified for the grant of a pilot's licence or the inclusion of an aircraft rating, a night rating or a night qualification in a licence; or

* SI 2010/770

* (b) for the purpose of a flying test for the grant of a pilot's licence or the inclusion of an aircraft rating, a night rating or a night qualification in a licence.

(4) Subject to paragraph (5), article 207 applies to any glider (other than a glider being flown under arrangements made by a flying club and carrying no person other than a member of the club) flying on a flight for the purpose of:

(a) the public transport of passengers; or

(b) instruction in flying.

(5) Article 207 does not apply to an aircraft flying under and in accordance with the terms of a police air operator's certificate.

* **Aerodromes – use for purposes of flying instruction and testing**

208A (1) The operator of an aerodrome which is not a licensed aerodrome must not permit an aircraft flying or intended to fly for a purpose specified in paragraph (3) to take off from or land at the aerodrome unless satisfied on reasonable grounds that the aerodrome has adequate facilities for the safe conduct of such flights.

(2) The commander of an aircraft must not take off from or land at an aerodrome which is not a licensed aerodrome on a flight for a purpose specified in paragraph (3) unless satisfied on reasonable grounds that the aerodrome has adequate facilities for the safe conduct of such flights.

(3) A flight is for a purpose specified in this paragraph if it is for the purpose of—

(a) instruction in flying given to any person for the purpose of becoming qualified for the grant of a pilot's licence or the inclusion of an aircraft rating, a night rating or a night qualification in a licence; or

(b) carrying out flying tests for the grant of a pilot's licence or the inclusion of an aircraft rating, a night rating or a night qualification in a licence.

Helicopters flying for public transport at night

209 (1) The person in charge of any area in the United Kingdom intended to be used for the take-off or landing of helicopters at night must cause there to be in operation, whenever a helicopter flying for the purpose of the public transport of passengers is taking off or landing at that area at night, such lighting as will enable the pilot of the helicopter:

(a) when landing, to identify the landing area in flight, to determine the landing direction and to make a safe approach and landing; and

(b) when taking off, to make a safe take-off.

(2) A helicopter flying for the purpose of the public transport of passengers at night must not take off or land at a place to which paragraph (1) applies unless there is in operation such lighting.

(3) Paragraph (1) does not apply to an aerodrome specified in article 207(2).

Use of Government aerodromes

210 With the concurrence of the Secretary of State and subject to such conditions as it thinks fit, the CAA may notify any Government aerodrome as an aerodrome available for the take-off and landing of aircraft flying on flights for the purpose of:

(a) the commercial air transport of passengers;

(b) the public transport of passengers; or

* SI 2010/770

(c) instruction in flying,

or of any classes of such aircraft.

Licensing of aerodromes

211 (1) The CAA must grant a licence for any aerodrome in the United Kingdom if it is satisfied that:

(a) the applicant is competent, having regard to its previous conduct and experience, and its equipment, organisation, staffing, maintenance and other arrangements, to secure that the aerodrome and the airspace within which its visual traffic pattern is normally contained are safe for use by aircraft;

(b) the aerodrome is safe for use by aircraft, having regard in particular to the physical characteristics of the aerodrome and of its surroundings;

(c) an effective safety management system is in place; and

(d) the aerodrome manual submitted under paragraph (7) is adequate.

(2) If the CAA grants an aerodrome licence it may do so subject to such conditions as it thinks fit and, subject to article 228, the licence remains in force for the period specified.

(3) An aerodrome licence holder must supply to any person on request information concerning the terms of the licence.

(4) An aerodrome licence holder must not contravene or cause or permit to be contravened any condition of the aerodrome licence at any time in relation to an aircraft flying on a flight specified in article 208, but the licence does not cease to be valid by reason only of such a contravention.

(5) An aerodrome licence holder must take all reasonable steps to secure that the aerodrome and the airspace within which its visual traffic pattern is normally contained are safe at all times for use by aircraft.

(6) On making an application for an aerodrome licence the applicant must submit to the CAA an aerodrome manual for that aerodrome.

(7) An aerodrome manual required under this article must contain all such information and instructions as may be necessary to enable the aerodrome operating staff to perform their duties as such including, in particular, information and instructions relating to the matters specified in Schedule 12.

(8) Every aerodrome licence holder must:

(a) supply to the CAA any amendments or additions to the aerodrome manual before or immediately after they come into effect;

(b) without prejudice to sub-paragraph (a), make such amendments or additions to the aerodrome manual as the CAA may require for the purpose of ensuring the safe operation of aircraft at the aerodrome or the safety of air navigation; and

(c) maintain the aerodrome manual and make such amendments as may be necessary for the purposes of keeping its contents up to date.

(9) Every aerodrome licence holder must make available to each member of the aerodrome operating staff a copy of the aerodrome manual, or a copy of every part of the aerodrome manual which is relevant to their duties and ensure that each such copy is kept up to date.

(10) Every aerodrome licence holder must take all reasonable steps to secure that all members of the aerodrome operating staff:

(a) are aware of the contents of every part of the aerodrome manual which is relevant to their duties; and

(b) undertake their duties in conformity with the relevant provisions of the manual.

(11) In this article:

(a) 'aerodrome licence holder' means a person who has been granted a licence under paragraph (1);

(b) 'aerodrome operating staff' means all persons, whether or not the aerodrome licence holder and whether or not employed by the aerodrome licence holder, whose duties are concerned either with ensuring that the aerodrome and airspace within which its visual traffic pattern is normally contained are safe for use by aircraft, or whose duties require them to have access to the aerodrome manoeuvring area or apron; and

(c) 'visual traffic pattern' means the aerodrome traffic zone of the aerodrome, or, in the case of an aerodrome which is not notified for the purposes of rule 45 of the Rules of the Air Regulations 2007[(a)], the airspace which would comprise the aerodrome traffic zone of the aerodrome if it were so notified.

Public use licence

212 (1) If the applicant for an aerodrome licence requests or if the CAA considers that an aerodrome should be available for the take-off or landing of aircraft to all persons on equal terms and conditions, the CAA may grant an aerodrome licence with a public use condition in addition to any other conditions.

(2) A public use condition is a condition that the aerodrome is to be available to all persons on equal terms and conditions at all times when it is available for the take-off or landing of aircraft.

(3) An aerodrome licence with a public use condition is in this Order referred to as 'a public use licence'.

(4) The holder of a public use licence must cause to be notified the times during which the aerodrome will be available for the take-off or landing of aircraft flying on flights for the purpose of the commercial air transport of passengers, the public transport of passengers or instruction in flying.

Charges at aerodromes with a public use licence

213 The holder of a public use licence must, when required by the Secretary of State, supply to the Secretary of State such information as he may require about the charges established by the licensee for the use of the aerodrome or of any facilities provided at the aerodrome for the safety, efficiency or regularity of air navigation.

Use of aerodromes by aircraft of Contracting States and of the Commonwealth

214 The person in charge of any aerodrome in the United Kingdom which is open to public use by aircraft registered in the United Kingdom (whether or not the aerodrome is a licensed aerodrome) must cause the aerodrome and all of its air navigation facilities to be available for use by aircraft registered in other Contracting States or in any part of the Commonwealth on the same terms and conditions as for use by aircraft registered in the United Kingdom.

(a) S.I. 2007/734 to which there are amendments not relevant to this provision.

* **Powers of aerodrome firefighters in an emergency**

214A (1) A member of the Rescue and Fire Fighting Service at a licensed aerodrome may do anything on the aerodrome the member reasonably believes to be necessary:

(a) if the member reasonably believes a fire to have broken out or to be about to break out, for the purpose of extinguishing or preventing the fire or protecting life or property;

(b) if the member reasonably believes an aircraft accident or incident to have occurred, for the purpose of rescuing people or protecting them from serious harm; or

(c) for the purpose of preventing or limiting damage to property resulting from any action taken as mentioned in sub-paragraph (a) or (b).

(2) In particular, a member of the Rescue and Fire Fighting Service at a licensed aerodrome, when acting in accordance with paragraph (1), may on the aerodrome:

(a) enter an aircraft, by force if necessary, without the consent of the owner or operator;

(b) restrict the access of persons to an aircraft, premises or a place.

(3) A person who without reasonable excuse obstructs or interferes with a member of the Rescue and Fire Fighting Service at a licensed aerodrome taking action authorised under this article commits an offence.

Noise and vibration caused by aircraft on aerodromes

215 (1) The Secretary of State may prescribe the conditions under which noise and vibration may be caused by aircraft (including military aircraft) on Government aerodromes, licensed aerodromes or on aerodromes at which the manufacture, repair or maintenance of aircraft is carried out by persons carrying on business as manufacturers or repairers of aircraft.

(2) Section 77(2) of the Civil Aviation Act 1982[(a)] applies to any aerodrome in relation to which the Secretary of State has prescribed conditions in accordance with paragraph (1).

Customs and Excise aerodromes

216 (1) The Secretary of State may, with the concurrence of the Commissioners for Revenue and Customs and subject to such conditions as they may think fit, by order designate any aerodrome to be a place for the landing or departure of aircraft for the purpose of the enactments for the time being in force relating to customs and excise.

(2) The Secretary of State may, with the concurrence of the Commissioners for Revenue and Customs, by order revoke any designation so made.

Aviation fuel at aerodromes

217 (1) Subject to paragraph (3), an aviation fuel installation manager must not cause or permit any fuel to be delivered to the installation unless satisfied that:

(a) the installation is capable of storing and dispensing the fuel so as not to render it unfit for use in aircraft;

(b) the installation is marked in a manner appropriate to the grade of fuel stored or if different grades are stored in different parts each part is so marked; and

(a) 1982 c.16.

* SI 2010/770

(c) in the case of delivery from a vehicle or vessel, the fuel has been sampled and is of a grade appropriate to that installation and is fit for use in aircraft.

(2) Subject to paragraph (3), an aviation fuel installation manager must not cause or permit any fuel to be dispensed from the installation to an aircraft unless satisfied as the result of sampling that the fuel is fit for use in aircraft.

(3) Paragraph (1) does not apply to fuel which has been removed from an aircraft and is intended for use in another aircraft operated by the same operator as the aircraft from which it has been removed.

(4) The aviation fuel installation manager must keep a written record for each installation of which they have the management, which record must include detailed information about:

(a) the grade and quantity of aviation fuel delivered and the date of delivery;

(b) all samples taken of the aviation fuel and of the results of tests of those samples; and

(c) the maintenance and cleaning of the installation.

(5) The aviation fuel installation manager must:

(a) preserve the written record required under paragraph (4) for 12 months or such longer period as the CAA may in a particular case direct; and

(b) within a reasonable time after being requested to do so by an authorised person, produce such record to that person.

(6) A person must not cause or permit any aviation fuel to be dispensed for use in an aircraft if the person knows or has reason to believe that the aviation fuel is not fit for use in aircraft.

(7) If it appears to the CAA or an authorised person that any aviation fuel is intended or likely to be delivered in contravention of any provision of this article, the CAA or that authorised person may direct the aviation fuel installation manager not to permit aviation fuel to be dispensed from that installation until the direction has been revoked by the CAA or by an authorised person.

(8) In this article:

(a) 'an aviation fuel installation manager' means a person who has the management of any aviation fuel installation on an aerodrome in the United Kingdom;

(b) 'aviation fuel' means fuel intended for use in aircraft; and

(c) 'aviation fuel installation' means any apparatus or container, including a vehicle, designed, manufactured or adapted for the storage of aviation fuel or for the delivery of such fuel to an aircraft.

PART 28 LIGHTS AND LIGHTING

Aeronautical lights

218 (1) Except with the permission of the CAA and in accordance with any conditions subject to which the permission may be granted, a person must not establish, maintain or alter the character of:

(a) an aeronautical beacon within the United Kingdom; or

(b) any aeronautical ground light (other than an aeronautical beacon) at a licensed aerodrome, or which forms part of the lighting system for use by aircraft taking off from or landing at such an aerodrome.

(2) In the case of an aeronautical beacon which is or may be visible from the waters within an area of a general lighthouse authority, the CAA must not give its permission for the purpose of this article except with the consent of that authority.

(3) A person must not intentionally or negligently damage or interfere with any aeronautical ground light established by or with the permission of the CAA.

Lighting of en-route obstacles

219 (1) The person in charge of an en-route obstacle must ensure that it is fitted with medium intensity steady red lights positioned as close as possible to the top of the obstacle and at intermediate levels spaced so far as practicable equally between the top lights and ground level with an interval of not more than 52 metres.

(2) The person in charge of an en-route obstacle must, subject to paragraph (3), ensure that by night the lights required to be fitted by this article are displayed.

(3) In the event of the failure of any light which is required by this article to be displayed by night the person in charge must repair or replace the light as soon as reasonably practicable.

(4) At each level on the obstacle where lights are required to be fitted, sufficient lights must be fitted and arranged so as to show when displayed in all directions.

(5) In any particular case the CAA may direct that an en-route obstacle must be fitted with and must display such additional lights in such positions and at such times as it may specify.

(6) A permission may be granted for the purposes of this article for a particular case or class of cases or generally.

(7) This article does not apply to any en-route obstacle for which the CAA has granted a permission to the person in charge permitting that person not to fit and display lights in accordance with this article.

(8) In this article, an 'en-route obstacle' means any building, structure or erection, the height of which is 150 metres or more above ground level, but it does not include a building, structure or erection:

(a) which is in the vicinity of a licensed aerodrome; and

(b) to which section 47 of the Civil Aviation Act 1982[(a)] (warning of presence of obstructions near licensed aerodromes) applies.

(a) 1982 c. 16.

Lighting of wind turbine generators in United Kingdom territorial waters

220 (1) Subject to paragraph (10), this article applies to any wind turbine generator:

(a) the height of which is 60 metres or more above the level of the sea at the highest astronomical tide; and

(b) which is situated in waters within or adjacent to the United Kingdom up to the seaward limits of the territorial sea.

(2) Subject to paragraph (3) the person in charge of a wind turbine generator must ensure that it is fitted with at least one medium intensity steady red light positioned as close as reasonably practicable to the top of the fixed structure.

(3) If four or more wind turbine generators are located together in the same group, with the permission of the CAA only those on the periphery of the group need be fitted with a light in accordance with paragraph (2).

(4) Subject to paragraph (5), the light or lights required by paragraph (2) must be so fitted as to show when displayed in all directions without interruption.

(5) When displayed:

(a) the angle of the plane of the beam of peak intensity emitted by the light must be elevated to between three and four degrees above the horizontal plane;

(b) not more than 45% or less than 20% of the minimum peak intensity specified for a light of this type is to be visible at the horizontal plane;

(c) not more than 10% of the minimum peak intensity specified for a light of this type is to be visible at a depression of 1.5 degrees or more below the horizontal plane.

(6) Subject to paragraph (7), the person in charge of a wind turbine generator must ensure that by night, any light required to be fitted by this article is displayed.

(7) In the event of the failure of any light which is required by this article to be displayed by night the person in charge of a wind turbine generator must repair or replace the light as soon as reasonably practicable.

(8) If visibility in all directions from every wind turbine generator in a group is more than 5 km the light intensity for any light required by this article to be fitted to any generator in the group and displayed may be reduced to not less than 10% of the minimum peak intensity specified for a light of this type.

(9) In any particular case the CAA may direct that a wind turbine generator must be fitted with and display such additional lights in such positions and at such times as it may specify.

(10) This article does not apply to any wind turbine generator for which the CAA has granted a permission to the person in charge permitting that person not to fit and display lights in accordance with this article.

(11) A permission may be granted for the purposes of this article for a particular case or class of cases or generally.

(12) In this article:

(a) 'wind turbine generator' is a generating station which is wholly or mainly driven by wind;

(b) the height of a wind turbine generator is the height of the fixed structure or if greater the maximum vertical extent of any blade attached to that structure; and

(c) a wind turbine generator is in the same group as another wind turbine generator if the same person is in charge of both and:

(i) it is within 2 km of that other wind turbine generator; or

(ii) it is within 2 km of a wind turbine generator which is in the same group as that other wind turbine generator.

Lights liable to endanger

221 (1) A person must not exhibit in the United Kingdom any light which:

(a) by reason of its glare is liable to endanger aircraft taking off from or landing at an aerodrome; or

(b) by reason of its liability to be mistaken for an aeronautical ground light is liable to endanger aircraft.

(2) If any light which appears to the CAA to be a light described in paragraph (1) is exhibited, the CAA may direct the person who is the occupier of the place where the light is exhibited or who has charge of the light, to take such steps within a reasonable time as are specified in the direction:

(a) to extinguish or screen the light; and

(b) to prevent in the future the exhibition of any other light which may similarly endanger aircraft.

(3) The direction may be served either personally or by post, or by affixing it in some conspicuous place near to the light to which it relates.

(4) In the case of a light which is or may be visible from any waters within the area of a general lighthouse authority, the power of the CAA under this article must not be exercised except with the consent of that authority.

Lights which dazzle or distract

222 A person must not in the United Kingdom direct or shine any light at any aircraft in flight so as to dazzle or distract the pilot of the aircraft.

INTENTIONALLY LEFT BLANK

PART 29 PUBLIC TRANSPORT AND AERIAL WORK BY FOREIGN REGISTERED AIRCRAFT

* **Restriction on carriage, where valuable consideration is given or promised, in aircraft registered elsewhere than in the United Kingdom**

223 (1) Unless paragraph (2) or (6) applies, an aircraft registered elsewhere than in the United Kingdom must not take on board or discharge any passengers or cargo in the United Kingdom where valuable consideration is given or promised for the carriage of such persons or cargo.

(2) This paragraph applies if—

(a) the operator or charterer of the aircraft or the Government of the country in which the aircraft is registered has been granted permission to take on board or discharge any passengers or cargo in the circumstances described in paragraph (1) by—

(i) the Secretary of State; or

(ii) the CAA; and

(b) any conditions, to which such permission may be subject, are satisfied.

(3) Where the Secretary of State decides to determine an application for permission under paragraph (2), the Secretary of State must notify both the CAA and the applicant..

(4) The CAA must not determine an application for permission where the Secretary of State has notified it pursuant to paragraph (3).

(5) In exercising a function under this article, the CAA must take account of any guidance given to it by the Secretary of State (including as to the circumstances in which the Secretary of State expects to determine an application for permission).

(6) (6) This paragraph applies if—

(a) the aircraft is flying pursuant to traffic rights conferred by Chapter III of Regulation (EC) No 1008/2008 of the European Parliament and of the Council of 24th September 2008 on common rules for the operation of air services in the Community; or

(b) an air operator's certificate has been issued to the operator of the aircraft pursuant to the Air Navigation (Overseas Territories) Order 2013.

(7) No operator or charterer of an aircraft in relation to which the prohibition in paragraph (1) applies may hold itself out as a person who may offer to take on board or discharge any passenger or cargo in the United Kingdom where valuable consideration is given or promised except where that person reasonably believes that paragraph (2) or (6) will apply in relation to the relevant aircraft, operator or charterer by the time the relevant flight is made.

Filing and approval of tariffs

224 (1) If a permission granted under article 223(2) contains a tariff provision and the Secretary of State so requires, the operator or charterer of the aircraft concerned must file with the CAA the tariff which it proposes to apply on flights to which the said permission relates and the CAA must consider the proposed tariff and may approve or disapprove it.

(2) In this article, 'tariff provision':

(a) means a condition as to any of the following matters:

(i) the price to be charged for the carriage of passengers, baggage or cargo on flights to which a permission granted under article 223(2) relates;

* SI 2014/508

(ii) any additional goods, services or other benefits to be provided in connection with such carriage;

(iii) the prices, if any, to be charged for any such additional goods, services or benefits; and

(iv) the commission, or rates of commission, to be paid in relation to the carriage of passengers, baggage or cargo; and

(b) includes any condition as to the applicability of any such price, the provision of any such goods, services or benefits or the payment of any such commission or of commission at any such rate.

** (3) Deleted

Restriction on aerial photography, aerial survey and aerial work in aircraft registered elsewhere than in an EEA state

* ** **225** (1) Subject to paragraph (2), an aircraft registered elsewhere than in the United Kingdom must not fly over the United Kingdom for the purpose of aerial photography or aerial survey or for the purpose of any other form of aerial work unles:

(a) the CAA has granted permission to do so to the operator or charterer of the aircraft; and

(b) any conditions, to which such permission may be subject, are satisfied.

(2) This article does not apply to an aircraft:

(a) registered in an EEA State;

(b) registered in a territory to which the Air Navigation (Overseas Territories) Order 2013 applies; or

(c) registered in the Isle of Man or Bailiwicks of Jersey or Guernsey.

* SI 2011/2432
** SI 2014/508

PART 30 MANDATORY REPORTING

Mandatory reporting of occurrences

226 (1) The objective of this article is to contribute to the improvement of air safety by ensuring that relevant information on safety is reported, collected, stored, protected and disseminated.

(2) The sole objective of occurrence reporting is the prevention of accidents and incidents and not to attribute blame or liability.

(3) This article applies to occurrences which endanger or which, if not corrected, would endanger an aircraft, its occupants or any other person.

(4) Without prejudice to the generality of paragraph (3), a list of examples of these occurrences is set out in Annexes I and II (and their Appendices) of the Occurrence Reporting Directive.

(5) Every person listed below must report to the CAA any event which constitutes an occurrence for the purposes of paragraph (3) and which comes to that person's attention in the exercise of that person's functions:

(a) the operator and the commander of a turbine-powered aircraft which has a certificate of airworthiness issued by the CAA;

(b) the operator and the commander of an aircraft operated under a national air operator's certificate or an EU-OPS air operator certificate granted by the CAA;

(c) a person who carries on the business of manufacturing a turbine-powered aircraft, a commercial air transport aeroplane or a public transport aircraft, or any equipment or part of such an aircraft, in the United Kingdom;

(d) a person who carries on the business of maintaining or modifying a turbine-powered aircraft, which has a certificate of airworthiness issued by the CAA, and a person who carries on the business of maintaining or modifying any equipment or part of such an aircraft;

(e) a person who carries on the business of maintaining or modifying an aircraft, operated under a national air operator's certificate or an EU-OPS air operator certificate granted by the CAA, and a person who carries on the business of maintaining or modifying any equipment or part of such an aircraft;

(f) a person who signs an airworthiness review certificate, or a certificate of release to service for a turbine-powered aircraft, which has a certificate of airworthiness issued by the CAA, and a person who signs an airworthiness review certificate or a certificate of release to service for any equipment or part of such an aircraft;

(g) a person who signs an airworthiness review certificate or a certificate of release to service for an aircraft operated under a national air operator's certificate or an EU-OPS air operator certificate granted by the CAA, and a person who signs an airworthiness review certificate or a certificate of release to service for any equipment or part of such an aircraft;

(h) a person who performs a function which requires him to be authorised by the CAA as an air traffic controller or as a flight information service officer;

(i) a licensee and a manager of a licensed aerodrome or a manager of an airport to which Chapter III of Regulation (EC) No 1008/2008 of the European Parliament and of the Council of 24th September 2008 on common rules for the operation of air services in the Community applies;

(j) a person who performs a function concerning the installation, modification, maintenance, repair, overhaul, flight-checking or inspection of air navigation facilities which are utilized by a person who provides an air traffic control service under an approval issued by the CAA;

(k) a person who performs a function concerning the ground-handling of aircraft, including fuelling, servicing, loadsheet preparation, loading, de-icing and towing at an airport to which Chapter III of Regulation (EC) No 1008/2008 of the European Parliament and of the Council of 24th September 2008 on common rules for the operation of air services in the Community applies.

(6) Reports of occurrences must be made within such time, by such means and containing such information as may be prescribed and must be presented in such form as the CAA may in any particular case approve.

(7) A person listed in paragraph (5) must make a report to the CAA within such time, by such means, and containing such information as the CAA may specify in a notice in writing served on the person, being information which is in that person's possession or control and which relates to an occurrence which has been reported by that person or another person to the CAA in accordance with this article.

(8) A person must not make any report under this article if the person knows or has reason to believe that the report is false in any particular.

(9) The CAA must put in place a mechanism to collect, evaluate, process and store occurrences reported in accordance with paragraphs (5) to (7).

(10) The CAA must store in its databases the reports which it has collected of occurrences, accidents and serious incidents.

(11) The CAA must make all relevant safety-related information stored in the databases mentioned in paragraph (10) available to the competent authorities of the other Member States and the Commission.

(12) The CAA must ensure that the databases referred to in paragraph (10) are compatible with the software developed by the European Commission for the purpose of implementing the Occurrence Reporting Directive.

(13) The CAA, having received an occurrence report, must enter it into its databases and notify, whenever necessary: the competent authority of the Member State where the occurrence took place; where the aircraft is registered; where the aircraft was manufactured, and where the operator's air operator's certificate was granted.

(14) The CAA must provide any entity entrusted with regulating civil aviation safety or with investigating civil aviation accidents and incidents within the Community with access to information on occurrences collected and exchanged in accordance with paragraphs (9) to (13) to enable it to draw the safety lessons from the reported occurrences.

(15) The CAA and the Chief Inspector of Air Accidents must use any information received in accordance with the terms of this article solely for the purposes set out in this article.

(16) The names or addresses of individual persons must not be recorded on the databases referred to in paragraph (10).

(17) Without prejudice to the rules of criminal law, no proceedings may be instituted in respect of unpremeditated or inadvertent infringements of the law which come to the attention of the relevant authorities only because they have been reported under this article as required by Article 4 of the Occurrence Reporting Directive, except in cases of gross negligence.

(18) The provisions in paragraphs (15) to (17) apply without prejudice to the right of access to information by judicial authorities.

(19) The CAA must put in place a system of voluntary reporting to collect and analyse information on observed deficiencies in aviation which are not required to be reported under the system of mandatory reporting, but which are perceived by the reporter as an actual or potential hazard.

(20) Voluntary reports presented to the CAA under paragraph (19) must be subjected to a process of disidentification by it where the person making the report requests that his or her identity is not recorded on the databases.

(21) The CAA must ensure that relevant safety information deriving from the analysis of reports, which have been subjected to disidentification, are stored and made available to all parties so that they can be used for improving safety in aviation.

Mandatory reporting of birdstrikes

227 (1) Subject to the provisions of this article, the commander of an aircraft must make a report to the CAA of any birdstrike occurrence which occurs whilst the aircraft is in flight in or over the United Kingdom.

(2) The report must be made within such time, by such means and contain such information as may be prescribed and it must be presented in such form as the CAA may in any particular case approve.

(3) Nothing in this article requires a person to report any occurrence which that person has reported under article 226 or which that person has reason to believe has been or will be reported by another person to the CAA in accordance with that article.

(4) A person must not make any report under this article if that person knows or has reason to believe that the report is false in any particular.

(5) In this article 'birdstrike occurrence' means an incident in flight in which the commander of an aircraft has reason to believe that the aircraft has been in collision with one or more birds.

INTENTIONALLY LEFT BLANK

PART 31 POWERS AND PENALTIES

Revocation, suspension and variation of certificates, licences and other documents

228 (1) Subject to paragraphs (5) and (6), the CAA may provisionally suspend or vary any certificate, licence, approval, permission, exemption, authorisation or other document issued, granted or having effect under this Order, pending inquiry into or consideration of the case.

(2) The CAA may, on sufficient ground being shown to its satisfaction after due inquiry, revoke, suspend or vary any such certificate, licence, approval, permission, exemption, authorisation or other document.

(3) The holder or any person having the possession or custody of any certificate, licence, approval, permission, exemption or other document which has been revoked, suspended or varied under this Order must surrender it to the CAA within a reasonable time after being required to do so by the CAA.

(4) The breach of any condition subject to which any certificate, licence, approval, permission, exemption or other document, other than an aerodrome licence, has been granted or issued or which has effect under this Order, in the absence of provision to the contrary in the document, renders the document invalid during the continuance of the breach.

** (5) The provisions of this article do not apply in relation to any permission to which article 230 applies.

(6) A flight manual, performance schedule or other document incorporated by reference in a certificate of airworthiness may be varied on sufficient ground being shown to the satisfaction of the CAA, whether or not after due inquiry.

* Provisional suspension or variation of EASA certificates, licences and other documents

229 (1) The CAA may, subject to and in accordance with article 14(1) of the Basic EASA Regulation, provisionally suspend or vary any certificate, licence, rating, endorsement, approval, authorisation or other document which it has issued to a person under an EASA Regulation, pending inquiry into or consideration of the case.

(2) A provisional suspension or variation under paragraph (1) ceases to have effect where:

(a) it is withdrawn by the CAA; or

(b) it is revoked by the CAA following a finding, in accordance with article 14(3) of the Basic EASA Regulation, that it is not justified.

(3) The CAA must revoke a provisional suspension or variation if it is found not to be justified under Article 14(3) of the Basic EASA Regulation.

Revocation, suspension and variation of permissions, etc. granted under article 223 or article 225

** **230** (1) This article applies to any permission granted by the Secretary of State under article 223 or by the CAA under article 223 or article 225.

(2) Subject to paragraph (7), the Secretary of State or the CAA may revoke, suspend or vary any permission to which this article applies after having given notice to the other and considered representations from the operator or charterer concerned.

(3) Subject to paragraph (7), the Secretary of State or the CAA may without notice revoke, suspend or vary any permission to which this article applies for reasons of urgency, in which case paragraph (4) applies.

* SI 2012/1751
** SI 2014/508

* (4) Where this paragraph applies, the person who revoked, suspended or varied any permission without notice under paragraph (3) must consider any representations made subsequently by the operator or charterer concerned and in response to such representations may:

(a) confirm, vary or lift the suspension;

(b) confirm the revocation of permission; or

(c) reinstate the permission with or without additional or varied conditions.

(5) In acting under paragraph (4), the Secretary of State or the CAA must act as soon as reasonably practicable.

(6) In particular, and without limitation, the Secretary of State may exercise the powers under paragraphs (2) and (3) if it appears that:

(a) the operator or charterer has committed a breach of any condition to which the permission is subject;

(b) any agreement between Her Majesty's Government in the United Kingdom and the Government of any other country pursuant to which the permission was granted is no longer in force or that the other Government has breached the agreement;

(c) the operator or charterer who has been granted permission, or a Government of another country which is a party to an agreement referred to in sub-paragraph (b), or the aeronautical authorities of the country concerned, has:

(i) acted in a manner which is inconsistent with or prejudicial to the operation in good faith, according to its object and purpose, of any such agreement; or

(ii) engaged in unfair, discriminatory or restrictive practices to the prejudice of the holder of an air transport licence or a route licence in the operation of air services; or

(d) the operator or charterer, having been granted permission as a result of being designated by the Government of any other country for the purposes of an agreement referred to in sub-paragraph (b):

(i) is no longer so designated; or

(ii) has conducted itself in such a way or is involved in such circumstances that the Secretary of State considers the exercise of those powers to be necessary or expedient.

(7) The CAA may only exercise the powers in paragraph (2) or (3) if it considers it necessary or expedient to do so for reasons of aviation safety.

* SI 2014/508

Prohibitions in relation to documents and records

231 (1) A person must not with intent to deceive:

(a) use any certificate, licence, approval, permission, exemption or other document issued or required by or under this Order, by or under an EASA Regulation or by or under EU-OPS which has been forged, altered, revoked or suspended, or to which the person is not entitled;

(b) lend any certificate, licence, approval, permission, exemption or any other document issued or having effect or required by or under this Order, by or under an EASA Regulation or by or under EU-OPS to, or allow it to be used by, any other person; or

(c) make any false representation for the purpose of procuring for any person the grant, issue, renewal or variation of any such certificate, licence, approval, permission, exemption or other document.

(2) In paragraph (1), a reference to a certificate, licence, approval, permission, exemption or other document includes a copy or purported copy.

(3) A person must not intentionally damage, alter or render illegible:

(a) any log book or other record required to be maintained by or under this Order, by or under an EASA Regulation or by or under EU-OPS; or

(b) any entry made in such a log book or record.

(4) A person must not:

(a) knowingly make, or procure or assist in the making of, any false entry in or material omission from any log book or record referred to in paragraph (3); or

(b) destroy any such log book or record during the period for which it is required under this Order to be preserved.

(5) All entries made in writing in any log book or record referred to in paragraph (3) must be made in ink or indelible pencil.

(6) A person must not knowingly make in a load sheet any entry which is incorrect in any material particular, or any material omission from such a load sheet.

(7) A person must not purport to issue any certificate for the purposes of this Order, any regulations made under this Order, an EASA Regulation or EU-OPS unless authorised to do so by the relevant legislation.

(8) A person must not issue any certificate referred to in paragraph (7) unless satisfied that all statements in the certificate are correct.

* SI 2012/1751

CAA's power to prevent aircraft flying

232 (1) If it appears to the CAA or an authorised person that any aircraft is intended or likely to be flown in any of the circumstances specified in paragraph (2), the CAA or that authorised person may direct in accordance with paragraph (3).

(2) The circumstances referred to in paragraph (1) are:

(a) where any provision of article 3, 10, 11, 12, 16, 42, 50, 98, 132, 133, 134, 139(2) or 152 would be contravened in relation to the flight;

(b) where the flight would be in contravention of any other provision of this Order, of any regulations made under this Order, of Part 21, 145 or M or of EU-OPS and be a cause of danger to any person or property whether or not in the aircraft; or

(c) where the aircraft is in a condition unfit for the flight, whether or not the flight would otherwise be in contravention of any provision of this Order, of any regulations made under this Order, of Part 21, 145 or M or of EU-OPS.

(3) If paragraph (1) applies the CAA or that authorised person may direct the operator or the commander of the aircraft not to permit the aircraft to make the particular flight or any other flight of such description as may be specified in the direction, until the direction has been revoked by the CAA or by an authorised person.

(4) If the CAA or an authorised person has directed under paragraph (3), the CAA or an authorised person may take such steps as are necessary to detain the aircraft.

(5) For the purposes of this article the CAA or any authorised person may enter and inspect any aircraft.

Power to prevent third-country aircraft taking off

233 If it appears to an authorised person that a third-country aircraft:

(a) has a safety deficiency and does not comply with international safety standards;

(b) would obviously be hazardous to flight safety; and

(c) is intended or is likely to be flown without completion by the operator of the appropriate corrective action,

that authorised person must give to the person appearing to be in command of the aircraft a direction in writing not to permit the aircraft to take off until further notice and take such steps as may be necessary to detain that aircraft.

Notifying competent authority of the detention of a third-country aircraft

234 If an authorised person detains a third-country aircraft that person must immediately inform the competent authority of the State of the operator of the detention and, where necessary, of the State in which the aircraft is registered.

Revocation of article 233 direction when validity of certificate of airworthiness affected

235 If an aircraft has been prohibited from taking off pursuant to article 233 and:

(a) the safety deficiency affects the validity of the certificate of airworthiness of the aircraft; and

(b) the CAA has granted the operator of the aircraft an exemption from the requirement that the aircraft must have a valid certificate of airworthiness,

an authorised person must not revoke a direction issued pursuant to article 233 without first being satisfied that the operator has obtained permission for the flight from all States over which it is intended to fly the aircraft.

Secretary of State's power to prevent aircraft flying

236 (1) If it appears to the Secretary of State or an authorised person that any aircraft is intended or likely to be flown in any of the circumstances specified in paragraph (2), the Secretary of State or that authorised person may make a direction in accordance with paragraph (3).

(2) The circumstances referred to in paragraph (1) are where any provision of article 120, 223 or 225 would be contravened in relation to the flight.

(3) If paragraph (1) applies the Secretary of State or that authorised person may direct the operator or the commander of the aircraft not to permit the aircraft to make a particular flight or any other flight of such description as may be specified in the direction until the direction has been revoked by the Secretary of State or by an authorised person.

(4) The Secretary of State or any authorised person may take such steps as are necessary to detain an aircraft concerning which a direction has been made under paragraph (1).

(5) For the purposes of paragraph (1) the Secretary of State or any authorised person may enter any aerodrome and may enter and inspect any aircraft.

Directions to operators of aircraft to make data available

237 (1) The Secretary of State may give a direction to any person who is an operator of an aircraft referred to in paragraph (2) requiring the operator to take the action referred to in paragraph (3).

(2) The aircraft is one which (alone or in combination with one or more other aircraft operated by the operator) is flown for the carriage of passengers from the United Kingdom (directly or via another country) to a country which is outside the European Economic Area and is specified in the direction.

(3) The action is the making available electronically of data in respect of all passengers and crew on the aircraft or expected to be on the aircraft.

(4) A direction may be given in respect of:

(a) all aircraft;

(b) any aircraft; or

(c) any class of aircraft,

of which (at the time when the direction is given or at any subsequent time) the person is the operator and which is or are specified in the direction.

(5) A direction must specify:

(a) the competent authorities of the country to whom the data are to be made available electronically; and

(b) the types of data to which the direction relates.

(6) A direction only has effect in relation to data which are collected and contained in the operator's automated reservation system or departure control system.

Right of access to aerodromes and other places

238 (1) Subject to paragraph (2), the CAA and any authorised person has the right of access at all reasonable times:

(a) to any aerodrome for the purpose of inspecting the aerodrome;

(b) to any aerodrome for the purpose of inspecting any aircraft on the aerodrome or any document which it or the authorised person has power to demand under this

Order, or for the purpose of detaining any aircraft under the provisions of this Order;

(c) to any place where an aircraft has landed, for the purpose of inspecting the aircraft or any document which it or the authorised person has power to demand under this Order and for the purpose of detaining the aircraft under the provisions of this Order;

(d) to any building or place from which an air traffic control service is being provided or where any air traffic service equipment requiring approval under article 205 is situated for the purpose of inspecting:

(i) any equipment used or intended to be used in connection with the provision of a service to an aircraft in flight or on the ground; or

(ii) any document or record which it or the authorised person has power to demand under this Order; and

*

(2) Access to a Government aerodrome may only be obtained with the permission of the person in charge of the aerodrome.

Obstruction of persons

239 A person must not intentionally obstruct or impede any person who is exercising a power or performing a duty under this Order.

Directions and directives

240 (1) Any person who without reasonable excuse fails to comply with any direction or directive given to that person under any provision of this Order or any regulations made under this Order is deemed for the purposes of article 241 to have contravened that provision.

(2) Where any provision of this Order or any regulations made under this Order gives to a person the power to direct, the person to whom such a power is given also has the power to revoke or vary any such direction or directive.

Offences and penalties

241 (1) Subject to paragraph (2), if any provision of this Order, any regulations made under this Order, Part 21, Part 145, Part M or EU-OPS is contravened in relation to an aircraft, the operator of that aircraft and the commander and, in the case of a contravention of article 223, the charterer of that aircraft, is (without prejudice to the liability of any other person for that contravention) deemed for the purposes of the following provisions of this article to have contravened that provision.

(2) A person will not be deemed to have contravened a provision specified in paragraph (1) if the person proves that the contravention occurred without that person's consent or connivance and that that person exercised all due diligence to prevent the contravention.

(3) If it is proved that an act or omission of any person which would otherwise have been a contravention by that person of a provision of this Order, any regulations made under this Order, an EASA Regulation or EU-OPS was due to any cause not avoidable by the exercise of reasonable care by that person, the act or omission will be deemed not to be a contravention by that person of that provision.

*

(4) If a person is charged with contravening a provision of this Order or any regulations made under this Order by reason of that person having been a member of the flight

* SI 2012/1751

crew of an aircraft on a flight for the purpose of commercial air transport, public transport or aerial work, the flight is to be treated (without prejudice to the liability of any other person under this Order) as not having been for that purpose if the person proves that they neither knew nor suspected that the flight was for that purpose.

(5) Any person who contravenes any provision specified in Part A of Schedule 13 is guilty of an offence and liable on summary conviction to a fine not exceeding level 3 on the standard scale.

(6) Any person who contravenes any provision specified in Part B of Schedule 13 is guilty of an offence and liable on summary conviction to a fine not exceeding level 4 on the standard scale.

(7) Any person who contravenes any provision specified in Part C of Schedule 13 is guilty of an offence and liable on summary conviction to a fine not exceeding the statutory maximum, and on conviction on indictment to a fine or imprisonment for a term not exceeding two years or both.

(8) Any person who contravenes any provision specified in Part D of Schedule 13 is guilty of an offence and liable on summary conviction to a fine not exceeding the statutory maximum and on conviction on indictment to a fine or imprisonment for a term not exceeding five years or both.

Exemption from Order

242 The CAA may exempt from any of the provisions of this Order (other than articles 120, 149, 151, 223, 224, 225, 230, and 243) or any regulations made under this Order, any aircraft or persons or classes of aircraft or persons, subject to such conditions as it thinks fit.

Appeal to County Court or Sheriff Court

243 (1) Subject to paragraphs (3), (4) and (5), an appeal lies to a county court from any decision of the CAA that a person is not a fit person to hold a licence to act as:

(a) an aircraft maintenance engineer;

(b) a member of the flight crew of an aircraft;

(c) an air traffic controller;

(d) a student air traffic controller; or

(e) a flight information service officer.

(2) If the court is satisfied that on the evidence submitted to the CAA it was wrong in deciding that a person is not a fit person to hold a licence, the court may reverse the CAA's decision and the CAA must give effect to the court's determination.

(3) An appeal does not lie from a decision of the CAA that a person is not qualified to hold the licence by reason of a deficiency in that person's knowledge, experience, competence, skill, physical or mental fitness.

(4) If the appellant resides or has its registered or principal office in Scotland the appeal lies to the sheriff within whose jurisdiction the appellant resides and the appeal is by way of summary application[(a)].

(5) Notwithstanding any provision to the contrary in rules governing appeals to the county court in Northern Ireland, if the appellant resides or has its registered or principal office in Northern Ireland the appeal lies to a county court held under the County Courts (Northern Ireland) Order 1980[(b)].

(a) Act of Sederunt (Summary Applications, Statutory Applications and Appeals etc Rules) 1999 S.I. 1999/929.
(b) S.I. 1980/397 (N.I. 3).

(6) The CAA will be a respondent to any appeal under this article.

(7) For the purposes of any provision relating to the time within which an appeal may be brought, the CAA's decision is deemed to have been taken on the date on which the CAA supplied a statement of its reasons for the decision to the applicant for the licence or the holder or former holder of it.

(8) In the case of an appeal to the sheriff:

(a) the sheriff may, if the sheriff thinks fit, and on the application of any party, appoint one or more persons of skill and experience in the matter to which the proceedings relate to act as assessor;

(b) where it is proposed to appoint any person as an assessor, an objection to the proposed assessor, either personally or concerning the proposed assessor's qualification, may be stated by any party to the appeal and must be considered and disposed of by the sheriff.

(9) The assessors for each sheriffdom must be appointed from a list of persons approved for the purposes by the sheriff principal and:

(a) such a list must be published in such manner as the sheriff principal directs;

(b) such a list will be in force for three years only, but persons entered in any such list may be again approved in any subsequent list; and

(c) it is lawful for the sheriff principal to defer the preparation of such a list until application has been made to appoint an assessor in an appeal in one of the courts in their sheriffdom.

(10) The sheriff before whom an appeal is heard with the assistance of an assessor must make a note of any question submitted by the sheriff to such assessor and of the answer to that question.

(11) An appeal lies on a point of law from any decision of a sheriff under this article to the Court of Session.

Approval of persons to supply reports

244 In relation to any of its functions under any of the provisions of this Order the CAA may approve a person as qualified to supply reports to it and may accept such reports.

Certificates, authorisations, approvals and permissions

245 Wherever in this Order there is provision for the issue or grant of a certificate, authorisation, approval or permission by the CAA, unless otherwise provided, such a certificate, authorisation, approval or permission:

(a) must be in writing;

(b) may be issued or granted subject to such conditions as the CAA thinks fit; and

(c) may be issued or granted, subject to article 228, for such periods as the CAA thinks fit.

Competent authority

246 (1) The CAA is the national aviation authority of the United Kingdom for the purposes of the Basic EASA Regulation.

* (2) The CAA is the competent authority of the United Kingdom for the purposes of:

(a) the EASA Aircraft Certification Regulation;

(b) the EASA Aircrew Regulation;

(c) the EASA Continuing Airworthiness Regulation; and

** (d) the EASA Air Operations Regulation.

(3) The CAA is the competent authority of the United Kingdom for the purposes of EU-OPS.

* (4) [deleted]

(5) The Secretary of State is the competent authority under article 15 of Council Directive 96/29/Euratom for the purposes of article 42 of the Directive[(a)].

(a) O.J. No. L 159, 29.6.1996, p.1.

* SI 2012/1751

** SI 2013/3169

INTENTIONALLY LEFT BLANK

PART 32 APPLICATION OF THE ORDER

Extra-territorial effect of the Order[(a)]

247 (1) Except where the context otherwise requires, the provisions of this Order, in so far as they apply (whether by express reference or otherwise):

(a) to aircraft registered in the United Kingdom, apply to such aircraft wherever they may be; and

(b) to such other aircraft when they are within the United Kingdom or on or in the neighbourhood of an offshore installation.

(2) Except where the context otherwise requires, the provisions of this Order in so far as they prohibit, require or regulate (whether by express reference or otherwise) the doing of anything:

(a) by persons in, or by any of the crew of, any aircraft registered in the United Kingdom, apply to such persons and crew, wherever they may be;

(b) in relation to any aircraft registered in the United Kingdom by other persons, where such persons are Commonwealth citizens, British protected persons or citizens of the Republic of Ireland, apply to them wherever they may be; and

(c) in relation to any aircraft on or in the neighbourhood of an offshore installation, apply to every person irrespective of their nationality or, in the case of a body corporate, of the law under which it was incorporated and wherever that person or body may be.

(3) Nothing in this article is to be construed as extending to make any person guilty of an offence in any case in which it is provided by section 3(1) of the British Nationality Act 1948[(b)] that that person will not be guilty of an offence.

Aircraft in transit over certain United Kingdom territorial waters

248 (1) This article applies to any aircraft which is registered elsewhere than in the United Kingdom when flying over the territorial waters adjacent to the United Kingdom within any part of a strait specified in Schedule 14.

(2) If an aircraft is flying solely for the purpose of continuous and expeditious transit of the strait, only the articles and Schedules specified in paragraph (3) apply to that aircraft.

(3) The articles and Schedules referred to in paragraph (2) are:

(a) article 39 and Schedule 5 to the extent necessary for the monitoring of the appropriate distress radio frequency;

(b) article 160(2), (3), and (4) and the regulations made under that article;

(c) article 241 and Part B of Schedule 13; and

(d) article 242.

(4) The powers conferred by the provisions referred to in paragraph (3) may not be exercised in a way which would hamper the transit of the strait by an aircraft registered elsewhere than in the United Kingdom, but without prejudice to action needed to secure the safety of aircraft.

(5) In this article:

(a) Paragraph 6 of Part III of Schedule 13 to the Civil Aviation Act 1982 c.16, as amended by section 101 of the Energy Act 2004 c.20, authorises the inclusion in an Air Navigation Order of certain extra-territorial provisions.

(b) 1948 c.56. Section 3(1) limits the criminal liability of certain persons who are not citizens of the United Kingdom and colonies.

'transit of the strait' means overflight of the strait from an area of high seas at one end of the strait to an area of high seas at the other end, or flight to or from an area of high seas over some part of the strait for the purpose of entering, leaving or returning from a State bordering the strait; and

'an area of high seas' means any area outside the territorial waters of any State.

Application of Order to British-controlled aircraft registered elsewhere than in the United Kingdom

249 (1) The CAA may direct that such of the provisions of this Order and of any regulations made or having effect under this Order as may be specified in the direction have effect as if reference in those provisions to aircraft registered in the United Kingdom included references to the aircraft specified in the direction.

(2) A direction under paragraph (1) may only specify an aircraft registered elsewhere than in the United Kingdom but for the time being under the management of a person who, or of persons each of whom, is qualified to hold a legal or beneficial interest by way of ownership in an aircraft registered in the United Kingdom.

Application of Order to the Crown

250 (1) Subject to the provisions of this article, the provisions of this Order apply to or in relation to aircraft belonging to or exclusively employed in the service of Her Majesty as they apply to or in relation to other aircraft.

(2) For the purposes of such application, the Department or other authority for the time being responsible on behalf of Her Majesty for the management of the aircraft is deemed to be the operator of the aircraft and, in the case of an aircraft belonging to Her Majesty, to be the owner of the interest of Her Majesty in the aircraft.

(3) Nothing in this article renders liable to any penalty any Department or other authority responsible on behalf of Her Majesty for the management of any aircraft.

Application of the Order to visiting forces

251 (1) This article applies to the naval, military and air force authorities and members of any visiting force and any international headquarters and the members and property held or used for the purpose of such a force or headquarters.

(2) Except as otherwise expressly provided in this Order, every body and person and any property to which this article applies is exempt from the provisions of this Order and of any regulations made under this Order to the same extent as if it formed part of the forces of Her Majesty raised in the United Kingdom and for the time being serving there.

Application of the Order to military aircraft

252 (1) Except as otherwise provided by paragraph (2), and articles 144(2), 160(1)(a), 162(7) and (17) and 215, nothing in this Order applies to or in relation to any military aircraft.

(2) If a military aircraft is flown by a civilian pilot and is not commanded by a person who is acting in the course of that person's duty as a member of any of Her Majesty's naval, military or air forces or as a member of a visiting force or international headquarters, the provisions specified in paragraph (3) apply to that flight.

(3) The provisions referred to in paragraph (2) are articles 137, 138, 139 and 161 and in addition article 160 (so far as applicable) applies unless the aircraft is flown in compliance with Military Flying Regulations (Joint Service Publication 550) or Flying Orders to Contractors (Aviation Publication 67) issued by the Secretary of State.

Exceptions from application of provisions of the Order for certain classes of aircraft

253 (1) This article applies to:

(a) any small balloon;

(b) any kite weighing not more than two kg;

(c) any small unmanned aircraft; and

(d) any parachute including a parascending parachute.

(2) Subject to paragraph (3), nothing in this Order applies to or in relation to an aircraft to which this article applies.

(3) Articles 131, 138, 161, 163, 164, 165, 166, 167, 232 except 232(2)(a) and 255 apply to or in relation to an aircraft to which this article applies.

Saving

254 (1) Subject to articles 211, 212 and 214, nothing in this Order or any regulations made under this Order confers any right to land in any place as against the owner of the land or any other persons interested in the land.

(2) Nothing in this Order obliges the CAA to accept an application from the holder of any current certificate, licence, approval, permission, exemption or other document, being an application for the renewal of that document, or for the grant of another document in continuation of or in substitution for the current document, if the application is made more than 60 days before the current document is due to expire.

INTENTIONALLY LEFT BLANK

PART 33 INTERPRETATION

Interpretation

255 (1) In this Order:

'A Conditions' means the conditions set out in Section 1 of Part A of Schedule 2;

'Accident prevention and flight safety programme' means a programme designed to detect and eliminate or avoid hazards in order to improve the safety of flight operations;

'Aerial work' has the meaning assigned to it by article 259;

'Aerial work aircraft' means an aircraft (other than a commercial air transport aeroplane or a public transport aircraft) flying, or intended by the operator to fly, for the purpose of aerial work;

'Aerial work flight' means a flight for the purpose of aerial work;

'Aerial work undertaking' means an undertaking whose business includes the performance of aerial work;

'Aerobatic manoeuvres' includes loops, spins, rolls, bunts, stall turns, inverted flying and any other similar manoeuvre;

'Aerodrome':

(a) means any area of land or water designed, equipped, set apart or commonly used for affording facilities for the landing and departure of aircraft; and

(b) includes any area or space, whether on the ground, on the roof of a building or elsewhere, which is designed, equipped or set apart for affording facilities for the landing and departure of aircraft capable of descending or climbing vertically; but

(c) does not include any area the use of which for affording facilities for the landing and departure of aircraft has been abandoned and has not been resumed;

'Aerodrome control service' means an air traffic control service for any aircraft:

(a) on the manoeuvring area or apron of the aerodrome for which the service is being provided;

(b) which is flying in, or in the vicinity of, the aerodrome traffic zone of that aerodrome by visual reference to the surface; or

(c) which has been transferred from approach control in accordance with procedures approved by the CAA;

'Aerodrome operating minima' in relation to the operation of an aircraft at an aerodrome means the cloud ceiling and runway visual range for take-off, and the decision height or minimum descent height, runway visual range and visual reference for landing, which are the minimum for the operation of that aircraft at that aerodrome;

'Aerodrome traffic zone' has the meaning assigned to it by article 258;

'Aeronautical beacon' means an aeronautical ground light which is visible either continuously or intermittently to designate a particular point on the surface of the earth;

'Aeronautical ground light' means any light specifically provided as an aid to air navigation, other than a light displayed on an aircraft;

'Aeronautical radio station' means a radio station on the surface, which transmits or receives signals for the purpose of assisting aircraft;

'Aircraft rating' includes a type rating and a class rating;

'Air/ground communications service' means a service provided from an aerodrome to give information to pilots of aircraft flying in the vicinity of the aerodrome by means of radio signals and 'air/ground communications service unit' is to be construed accordingly;

* |

'Air traffic control service' means a service provided for the purpose of preventing collisions between aircraft, and, on the manoeuvring area, between aircraft and obstructions, and expediting and maintaining an orderly flow of air traffic;

'Air traffic control unit' means a person appointed by a person maintaining an aerodrome or place to provide an air traffic control service;

'Air traffic service equipment' means ground based equipment, including an aeronautical radio station, used or intended to be used in connection with the provision of a service to an aircraft in flight or on the ground which equipment is not otherwise approved by or under this Order but excluding:

(a) any public electronic communications network; and

(b) any equipment concerning which the CAA has made a direction that it is not air traffic service equipment for the purposes of articles 205 and 206;

'Alternate aerodrome' means an aerodrome to which an aircraft may proceed when it becomes either impossible or inadvisable to proceed to or to land at the aerodrome of intended landing;

'Altitude hold and heading mode' mean aircraft autopilot functions which enable the aircraft to maintain an accurate height and an accurate heading;

'Annual costs' in relation to the operation of an aircraft means the best estimate reasonably practicable at the time of a particular flight for the year commencing on the first day of January preceding the date of the flight, of the costs of keeping and maintaining and the indirect costs of operating the aircraft, such costs in either case excluding direct costs and being those actually and necessarily incurred without a view to profit;

'Annual flying hours' means the best estimate reasonably practicable at the time of a particular flight by an aircraft of the hours flown or to be flown by the aircraft for the year commencing on the first day of January preceding the date of the flight;

'Approach control service' means an air traffic control service for any aircraft which is not receiving an aerodrome control service, which is flying in, or in the vicinity of the aerodrome traffic zone of the aerodrome for which the service is being provided, whether or not the aircraft is flying by visual reference to the surface;

'Approach to landing' means that portion of the flight of the aircraft, when approaching to land, in which it is descending below a height of 1000 feet above the relevant specified decision height or minimum descent height;

'Appropriate aeronautical radio station' means in relation to an aircraft an aeronautical radio station serving the area in which the aircraft is for the time being;

* SI 2012/1751

'Appropriate air traffic control unit' means, in relation to an aircraft, as the context requires:

(a) the air traffic control unit serving the area in which the aircraft currently is; or

(b) the air traffic control unit serving the area which the aircraft intends to enter and with which unit the aircraft is required to communicate before entering that area;

'Apron' means the part of an aerodrome provided for the stationing of aircraft for the embarkation and disembarkation of passengers, for loading and unloading of cargo and for parking;

'Area control centre' means an air traffic control unit established to provide an area control service to aircraft flying within a notified flight information region which are not receiving an aerodrome control service or an approach control service;

'Area control service' means an air traffic control service for any aircraft which is flying neither in nor in the vicinity of an aerodrome traffic zone;

'Area navigation equipment' means equipment carried on board an aircraft which enables the aircraft to navigate on any desired flight path within the coverage of appropriate ground based navigation aids or within the limits of that on-board equipment or a combination of the two;

'Authorised person' means:

(a) any constable;

(b) in any article other than articles 233, 234, 235 and 236 any person authorised by the CAA (whether by name or by class or description) either generally or in relation to a particular case or class of cases;

(c) in article 236 any person authorised by the Secretary of State (whether by name, or by class or description) either generally or in relation to a particular case or class of cases; and

(d) in articles 233, 234 and 235 any person authorised by the Secretary of State pursuant to regulation 5 of the Civil Aviation (Safety of Third-Country Aircraft) Regulations 2006[(a)];

'Automated reservation system' means the central reservation system of the operator of an aircraft which holds data relating to a flight booked by or on behalf of a passenger;

'B Conditions' means the conditions set out in Section 2 of Part A of Schedule 2;

'Basic EASA Regulation' means Regulation (EC) No. 216/2008 of the European Parliament and of the Council of 20th February 2008 on common rules in the field of civil aviation and establishing a European Aviation Safety Agency, and repealing Council Directive 91/670/EEC, Regulation (EC) No. 1592/2002 and Directive 2004/36/EC[(b)];

'Beneficial interest' includes interests arising under contract and other equitable interests;

'British protected person' has the same meaning as in section 50 of the British Nationality Act 1981[(c)];

(a) S.I. 2006/1384.
(b) O.J. No. L 79 of 19.03.2008, p.1.
(c) 1981 c.61.

'Cabin crew' in relation to an aircraft means those persons on a public transport flight carried for the purpose of performing duties to be assigned by the operator or the commander of the aircraft in the interests of the safety of passengers but who do not act as a member of the flight crew;

'Captive balloon' means a balloon which when in flight is attached by a restraining device to the surface;

'Captive flight' means flight by an uncontrollable balloon during which it is attached to the surface by a restraining device;

'Cargo' includes mail and animals;

'Category II approach and landing' means a landing following a precision approach using an Instrument Landing System or Microwave Landing System with:

(a) a decision height below 200 feet but not less than 100 feet; and

(b) a runway visual range of not less than 300 metres;

'Category IIIA approach and landing' means a landing following a precision approach using an Instrument Landing System or Microwave Landing System with:

(a) a decision height lower than 100 feet; and

(b) a runway visual range of not less than 200 metres;

'Category IIIB approach and landing' means a landing following a precision approach using an Instrument Landing System or Microwave Landing System with:

(a) a decision height lower than 50 feet or no decision height; and

(b) a runway visual range of less than 200 metres but not less than 75 metres;

'Certificate of airworthiness' includes in the case of a national certificate of airworthiness any flight manual, performance schedule or other document, whatever its title, incorporated by reference in that certificate relating to the certificate of airworthiness;

Certificate of maintenance review' has the meaning assigned to it by article 25(3);

'Certificate of release to service issued under Part 145' means a certificate of release to service issued in accordance with Part 145;

'Certificate of release to service issued under this Order' means a certificate issued in accordance with article 30 by a person specified in article 31;

'Certificate of revalidation' means a certificate issued in accordance with Section 2 of Part C of Schedule 7 for the purpose of maintaining the privileges of a flight crew licence;

'Certificate of validity' has the meaning assigned to it by article 22(5);

'Certificated for single pilot operation' means in relation to an aircraft one which is not required to carry more than one pilot by virtue of any one or more of the following:

(a) the certificate of airworthiness duly issued or rendered valid under the law of the country in which the aircraft is registered or the related flight manual;

(b) if no certificate of airworthiness is required to be in force, the certificate of airworthiness, if any, last in force for the aircraft or the related flight manual;

(c) if no certificate of airworthiness is or has previously been in force but the aircraft is identical in design with an aircraft for which such a certificate is or has been in force, the certificate of airworthiness which is or has been in force for such an identical aircraft or the related flight manual; or

(d) in the case of an aircraft flying in accordance with the conditions of a national permit to fly or an EASA permit to fly, that permit to fly;

'Certified training provider' means a person who has been certified by the CAA under article 198 or by a national supervisory authority of another Member State in accordance with article 13 of the air traffic controllers' directive;

'Class A airspace', 'Class B airspace', 'Class C airspace', 'Class D airspace' and 'Class E airspace' mean airspace respectively notified as such;

* 'Class rating' means a rating that entitles the holder of a pilot licence to act as pilot of an aircraft of a specified class that does not require a type rating;

'Cloud ceiling' in relation to an aerodrome means the vertical distance from the elevation of the aerodrome to the lowest part of any cloud visible from the aerodrome which is sufficient to obscure more than one-half of the sky so visible;

'Commander' in relation to an aircraft means the member of the flight crew designated as commander of that aircraft by the operator, or, failing such a person, the person who is for the time being the pilot in command of the aircraft;

'the Commonwealth' means the United Kingdom, the Channel Islands, the Isle of Man, the countries mentioned in Schedule 3 to the British Nationality Act 1981[(a)] and all other territories forming part of Her Majesty's dominions or in which Her Majesty has jurisdiction and 'Commonwealth citizen' is to be construed accordingly;

'Commercial air transport aeroplane' means an aeroplane flying, or intended by the operator of the aeroplane to fly, for the purpose of commercial air transport;

* 'Commercial air transport flight' means a flight which is required to be operated in accordance with EU-OPS or a flight which would, if undertaken by an EASA aeroplane registered in a Member State be so required: and an aircraft flies for the purpose of commercial air transport if it flies on a commercial air transport flight;

'Competent authority' means, subject to article 246, in relation to the United Kingdom, the CAA, and in relation to any other country the authority responsible under the law of that country for promoting the safety of civil aviation;

'Conditional sale agreement' has the same meaning as in section 189 of the Consumer Credit Act 1974[(b)];

'Congested area' in relation to a city, town or settlement, means any area which is substantially used for residential, industrial, commercial or recreational purposes;

'Contracting State' means any State (including the United Kingdom) which is party to the Chicago Convention;

'Controllable balloon' means a balloon which is not a small balloon and which is capable of free controlled flight;

'Controlled airspace' means airspace which has been notified as Class A, Class B, Class C, Class D or Class E airspace;

'Control area' means controlled airspace which has been further notified as a control area and which extends upwards from a notified altitude or flight level;

'Control zone' means controlled airspace which has been further notified as a control zone and which extends upwards from the surface;

(a) 1981 c.61; as amended by S.I. 1983/882; S.I. 1983/1699; the Brunei and Maldives Act 1985, section 1 and paragraph 8 of the Schedule, S.I. 1989/1331; S.I. 1990/1502; S.I. 1994/1634 and S.I. 1998/3161.

(b) 1974 c.39.

* SI 2012/1751

'Co-pilot' means a pilot who in performing duties as such is subject to the direction of another pilot carried in the aircraft;

'Country' includes a territory;

'Crew' means persons carried in an aircraft who are:

(a) a member of the flight crew;

(b) a person carried on the flight deck who is appointed by the operator of the aircraft to give or to supervise the training, experience, practice and periodical tests required for the flight crew under article 95(2) or any provision of EU-OPS; or

(c) a member of the cabin crew;

'Critical power unit' means the power unit whose failure would most adversely affect the performance or handling qualities of an aircraft;

'Danger Area' means airspace which has been notified as such within which activities dangerous to the flight of aircraft may take place or exist at such times as may be notified;

'Decision height' in relation to the operation of an aircraft at an aerodrome means the height in a precision approach at which a missed approach must be initiated if the required visual reference to continue that approach has not been established;

'Declared distance' has the meaning which has been notified;

'Departure control system' means, in relation to an operator of an aircraft, the system used by the operator to check passengers onto a flight;

'Direct costs' means the costs actually and necessarily incurred in connection with a flight without a view to profit but excluding any remuneration payable to the pilot for services as such;

'Director' has the same meaning as in section 250 of the Companies Act 2006[(a)];

'Disidentification' means removing from reports submitted all personal details pertaining to the reporter and technical details which might lead to the identity of the reporter, or of third parties, being inferred from the information;

'EASA' means the European Aviation Safety Agency established under the Basic EASA Regulation;

** 'EASA Air Operations Regulation' means Commission Regulation (EU) No. 965/2012 of 5th October 2012 laying down technical requirements and administrative procedures related to air operations pursuant to Regulation (EC) No. 216/2008 of the European Parliament and of the Council[(b)].

* 'EASA Air Traffic Controller Licensing Regulation' means Commission Regulation (EU) No 805/2011 of 10th August 2011 laying down detailed rules for air traffic controllers' licences and certain certificates pursuant to Regulation (EC) No 216/2008[(c)] of the European Parliament and of the Council[(d)];

'EASA aircraft' means an aircraft which is required by the Basic EASA Regulation and any implementing rules adopted by the Commission in accordance with that Regulation to hold an EASA certificate of airworthiness, an EASA restricted certificate of airworthiness or an EASA permit to fly;

(a) 2006 c.46.
(b) O.J. No. L 296, 25.10.2012, p.1.
(c) OJ No L 79, 19.3.2008, p.1.
(d) OJ No L 206, 11.8.2011, p.21.

* SI 2012/1751
** SI 2013/3169

* 'EASA Aircraft Certification Regulation' means Commission Regulation (EC) No. 1702/2003 of 24th September 2003 laying down implementing rules for the airworthiness and environmental certification of aircraft and related products, parts and appliances, as well as for the certification of design and production organisations[(a)];

* 'EASA Aircrew Regulation' means Commission Regulation (EU) No. 1178/2011 of 3rd November 2011, laying down technical requirements and administrative procedures related to civil aviation aircrew pursuant to Regulation (EC) No 216/2008 of the European Parliament and of the Council[(b)];

'EASA certificate of airworthiness' means a certificate of airworthiness issued for an EASA aircraft under and in accordance with subpart H of Part 21;

'EASA Continuing Airworthiness Regulation' means Commission Regulation (EC) No. 2042/2003 of 20th November 2003 on the continuing airworthiness of aircraft and aeronautical products, parts and appliances, and on the approval of organisations and personnel involved in these tasks[(c)];

'EASA permit to fly' means a permit to fly issued for an EASA aircraft under and in accordance with subpart P of Part 21;

* 'EASA Regulation' means the Basic EASA Regulation and any implementing rule made under that Regulation;

'EASA restricted certificate of airworthiness' means a restricted certificate of airworthiness issued for an EASA aircraft under and in accordance with subpart H of Part 21;

'EU-OPS' means Annex III to the Technical Harmonisation Regulation[(d)];

'EU-OPS aeroplane' means an aeroplane operated by an EU-OPS operator;

'EU-OPS air operator certificate' means an air operator's certificate granted under EU-OPS;

'EU-OPS operator' means an operator who holds an EU-OPS air operator certificate;

* 'Expiring national certificate of airworthiness' means a national certificate of airworthiness with an expiry date;

'Flight' and 'to fly' have the meanings respectively assigned to them by article 256;

'Flight check' means a check carried out by an aircraft in flight of the accuracy and reliability of signals transmitted by an aeronautical radio station;

'Flight crew' in relation to an aircraft means those members of the crew of the aircraft who respectively undertake to act as pilot, flight navigator, flight engineer and flight radiotelephony operator of the aircraft;

'Flight data monitoring programme' means a programme of analysing recorded flight data in order to improve the safety of flight operations;

'Flight information service' means:

(a) in the case of an aerodrome:

(a) O.J. No. L 243, 24.9.2003, p.6.
(b) O.J. No L 311, 25.11.2011, p.1.
(c) O.J. No. L 315, 28.11.2003, p.1. This Regulation was amended as specified at footnote (e) on page 126. There are other amendments not relevant to this Order.
(d) The Technical Harmonisation Regulation was amended and Annex III inserted by Regulation 1899/2006 of the European Parliament and of the Council of 12 December 2006 O.J. No. L 377, 27.12.2006, p.1; an updated Annex III was inserted by Commission Regulation 859/2008 O.J. No. L 254, 20.9.2008, p.1.

* SI 2012/1751

(i) the giving of information by means of radio signals to aircraft flying in or intending to fly within the aerodrome traffic zone of that aerodrome; and

(ii) the grant or refusal of a permission under rule 40(b) or 41(2) of the Rules of the Air Regulations 2007[(a)]; and

(b) in the case of an area control centre, the giving of information by means of radio signals to aircraft,

and 'aerodrome flight information service' is to be construed accordingly;

'Flight information service unit' means a person appointed by the CAA or by any other person maintaining an aerodrome or area control centre to provide a flight information service and 'aerodrome flight information service unit' is to be construed accordingly;

'Flight level' means one of a series of levels of equal atmospheric pressure, separated by notified intervals and each expressed as the number of hundreds of feet which would be indicated at that level on a pressure altimeter calibrated in accordance with the International Standard Atmosphere and set to 1013.2 hectopascals;

'Flight manual' means a document provided for an aircraft stating the limitations within which the aircraft is considered airworthy as defined by the appropriate airworthiness requirements, and additional instructions and information necessary for the safe operation of the aircraft;

'Flight recording system' means a system comprising either a flight data recorder or a cockpit voice recorder or both;

'Flight simulator' means apparatus by means of which flight conditions in an aircraft are simulated on the ground;

'Flight visibility' means the visibility forward from the flight deck of an aircraft in flight;

'Flying display' means any flying activity deliberately performed for the purpose of providing an exhibition or entertainment at an advertised event open to the public;

'Flying machine' means an aeroplane, a powered lift tilt rotor aircraft, a SLMG, a helicopter or a gyroplane;

'Free balloon' means a balloon which when in flight is not attached by any form of restraining device to the surface;

'Free controlled flight' means flight during which:

(a) a balloon is not attached to the surface by any form of restraining device (other than a tether of not more than five metres in length which may be used as part of the take-off procedure); and

(b) the height of the balloon is controllable by means of a device attached to the balloon and operated by the commander of the balloon or by remote control;

'General lighthouse authority' has the same meaning as in section 193 of the Merchant Shipping Act 1995[(b)];

* 'General medical practitioner' means a person registered in the General Practitioner Register kept by the General Medical Council;

(a) S.I. 2007/734 to which there are amendments not relevant to this provision.
(b) 1995 c.21.
* SI 2012/1751

'Glider' means:

(a) a non-power-driven, heavier-than-air aircraft, deriving its lift in flight chiefly from aerodynamic reactions on surfaces which remain fixed under given conditions of flight;

(b) a self-sustaining glider; and

(c) a self-propelled hang-glider;

* |

'Government aerodrome' means any aerodrome in the United Kingdom which is in the occupation of any Government Department or visiting force;

'Hire-purchase agreement' has the same meaning as in section 189 of the Consumer Credit Act 1974;

'Holding' means, in the case of an aircraft approaching an aerodrome to land, a manoeuvre in the air which keeps that aircraft within a specified volume of airspace;

'Hostile environment' means, for the purposes of sub-paragraphs 4(15)(b)(ix) and (xvii) of Schedule 4, an environment in which:

(a) a safe forced landing cannot be accomplished because the surface is inadequate; or

(b) the helicopter occupants cannot be adequately protected from the elements; or

(c) search and rescue response and capability is not provided consistent with anticipated exposure; or

(d) there is an unacceptable risk of endangering persons or property on the ground;

'Instructor's rating' means a flying instructor's rating, an assistant flying instructor's rating, a flight instructor rating (aeroplane), a flight instructor rating (helicopter), a type rating instructor rating (multi-pilot aeroplane), a type rating instructor rating (helicopter), a class rating instructor rating (single pilot aeroplane), an instrument rating instructor rating (aeroplane) or an instrument rating instructor rating (helicopter) or any instructor certificate issued in accordance with Part-FCL;

** |

'Instrument approach procedure' means a series of predetermined manoeuvres by reference to flight instruments, with specified protection from obstacles, from a specified point to a point from which a landing can be completed and thereafter, if a landing is not completed, to a position at which holding or other obstacle clearance criteria apply;

'Instrument flight procedure' means:

(a) a standard instrument arrival;

(b) an instrument approach procedure;

(c) a standard instrument departure; or

(d) a planned departure route;

'Instrument Flight Rules' means Instrument Flight Rules prescribed by Section 6 of the Rules of the Air Regulations 2007;

'Instrument Landing System' means a ground-based radio system designed to transmit radio signals at very high frequency and ultra high frequency that allow the pilot of an aircraft to accurately determine the aircraft's position relative to a defined approach path whilst carrying out an approach to land;

* SI 2011/2432
** SI 2012/1751

'Instrument Meteorological Conditions' means weather precluding flight in compliance with the Visual Flight Rules;

'International headquarters' means an international headquarters designated by Order in Council under section 1 of the International Headquarters and Defence Organisations Act 1964[(a)];

'International safety standards' means the safety standards contained in the Chicago Convention as in force from time to time;

'JAA' means the body that was known as the Joint Aviation Authorities, until its dissolution on 30th June 2009[(b)], which was previously an associated body of the European Civil Aviation Conference;

'JAA Full Member State' means a State which was a full member of the JAA on 30th June 2009;

* |

'JAR-FCL 1' means, unless otherwise specified, the Joint Aviation Requirement of the JAA bearing that title including Amendment 5 adopted by the JAA on 1st March 2006;

'JAR-FCL 2' means the Joint Aviation Requirement of the JAA bearing that title including Amendment 3 adopted by the JAA on 1st September 2003;

* |

'kg' means kilogramme or kilogrammes as the context requires;

'km' means kilometre or kilometres as the context requires;

'To land' in relation to aircraft includes alighting on the water;

'Large rocket' means a rocket of which the total impulse of the motor or combination of motors is more than 10,240 Newton-seconds;

'Legal personal representative' means the person constituted as the executor, administrator, or other representative, of a deceased person;

'Let-down' means, in the case of an aircraft approaching an aerodrome to land, a defined procedure designed to enable an aircraft to descend safely to a point at which it can continue the approach visually;

'Licence' includes in relation to a flight crew licence any certificate of competency or certificate of validity or revalidation issued with the licence or required to be held in connection with the licence by the law of the country in which the licence is granted;

'Licensed aerodrome' means an aerodrome licensed under article 211;

'Lifejacket' includes any device designed to support a person individually in or on the water;

'Log book' includes in the case of an aircraft log book, engine log book or variable pitch propeller log book, or personal flying log book, a record kept either in a book, or by any other means approved by the CAA in the particular case;

(a) 1964 c.5.
(b) The JAA was dissolved pursuant to a resolution of the European Civil Aviation Conference submitted to the Special Plenary Session of the European Civil Aviation Conference held on 25th June 2008.

* SI 2012/1751

'Maintenance' means in relation to an aircraft any one or combination of overhaul, repair, inspection, replacement, modification or defect rectification of an aircraft or component, with the exception of pre-flight inspection;

'Manoeuvring area' means the part of an aerodrome provided for the take-off and landing of aircraft and for the movement of aircraft on the surface, excluding the apron and any part of the aerodrome provided for the maintenance of aircraft;

'Maximum approved passenger seating configuration' means:

(a) in the case of an aircraft to which article 83 applies the maximum approved passenger seating configuration specified in the operations manual of the aircraft; and

(b) in any other case, the maximum number of passengers which may be carried in the aircraft under and in accordance with its certificate of airworthiness, its flight manual and this Order;

'Maximum total weight authorised' means in relation to an aircraft the maximum total weight of the aircraft and its contents at which the aircraft may take off anywhere in the world, in the most favourable circumstances in accordance with the certificate of airworthiness in force for the aircraft;

'Medical attendant' means a person carried on a flight for the purpose of attending to any person in the aircraft in need of medical attention, or to be available to attend to such a person;

'Medium intensity steady red light' means a red light which complies with the characteristics described for a medium intensity Type C light as specified in Volume 1 (Aerodrome Design and Operations) of Annex 14 (Fourth Edition July 2004) to the Chicago Convention[(a)];

'Microlight aeroplane' means an aeroplane designed to carry not more than two persons which has:

(a) a maximum total weight authorised not exceeding:

(i) 300kg for a single seat landplane, (or 390kg for a single seat landplane of which at least 51% was built by an amateur, or non-profit making association of amateurs, for their own purposes and without any commercial objective, in respect of which a permit to fly issued by the CAA was in force prior to 1st January 2003);

(ii) 450kg for a two-seat landplane; or

(iii) 330kg for a single seat amphibian or floatplane; or

(iv) 495kg for a two-seat amphibian or floatplane; or

(v) 315kg for a single seat landplane equipped with an airframe mounted total recovery parachute system; or

(vi) 472.5kg for a two-seat landplane equipped with an airframe mounted total recovery parachute system; and

(b) a stalling speed, or minimum steady flight speed in the landing configuration, at the maximum total weight authorised not exceeding 35 knots calibrated airspeed;

(a) Annex 14 is published by the International Civil Aviation Organisation. For availability see Explanatory Note.

'Microwave Landing System' means a ground-based radio system designed to transmit radio signals at super high frequency that allow the pilot of an aircraft to accurately determine the aircraft's position within a defined volume of airspace whilst carrying out an approach to land;

'Military aircraft' means:

(a) the naval, military or air force aircraft of any country;

(b) any aircraft being constructed for the naval, military or air force of any country under a contract entered into by the Secretary of State; and

(c) any aircraft for which there is in force a certificate issued by the Secretary of State that the aircraft is to be treated for the purposes of this Order as a military aircraft;

'Military rocket' means:

(a) any rocket being constructed for the naval, military or air force of any country under a contract entered into by the Secretary of State; and

(b) any rocket for which there is in force a certificate issued by the Secretary of State that the rocket is to be treated for the purposes of this Order as a military rocket;

'Minimum descent height' in relation to the operation of an aircraft at an aerodrome means the height in a non-precision approach below which descent may not be made without the required visual reference;

'Multi-crew co-operation' means the functioning of the flight crew as a team of co-operating members led by the pilot in command;

'National air operator's certificate' means an air operator's certificate granted by the CAA under article 12(2);

* 'National airworthiness review certificate' means a certificate issued in accordance with article 36D or 36E;

'National certificate of airworthiness' means either an expiring or a non-expiring certificate of airworthiness issued under article 18;

'National permit to fly' means a permit to fly issued under article 21;

'Nautical mile' means the International Nautical Mile, that is to say, a distance of 1852 metres;

'Night' means the time from half an hour after sunset until half an hour before sunrise (both times inclusive), sunset and sunrise being determined at surface level;

'Non-EASA aircraft' means an aircraft which is not required by the Basic EASA Regulation and any implementing rules adopted by the Commission in accordance with that Regulation to hold an EASA certificate of airworthiness, an EASA restricted certificate of airworthiness or an EASA permit to fly; and a non-EASA balloon, a non-EASA glider, a non-EASA helicopter, a non-EASA SLMG, a non-EASA SSEA and a non-EASA kite are to be construed accordingly;

* 'Non-expiring national certificate of airworthiness' means a national certificate of airworthiness that, subject to articles 19 and 228, remains valid for an unlimited duration provided the aircraft remains registered in the United Kingdom;

'Non-precision approach' means an instrument approach using non-visual aids for guidance in azimuth or elevation but which is not a precision approach;

* SI 2012/1751

'Non-revenue flight' means:

(a) in the case of a flight by an aeroplane, any flight which the holder of a United Kingdom Private Pilot's Licence (Aeroplanes) is not prohibited from undertaking by paragraph (2)(a) and (b) of the privileges of that licence set out in Section 1 of Part A of Schedule 7;

(b) in the case of a flight by a helicopter, any flight which the holder of a United Kingdom Private Pilot's Licence (Helicopters) is not prohibited from undertaking by paragraph (2)(a) and (b) of the privileges of that licence set out in Section 1 of Part A of Schedule 7; and

(c) in the case of a flight by a gyroplane, any flight which the holder of a United Kingdom Private Pilot's Licence (Gyroplanes) is not prohibited from undertaking by under paragraph (2)(a) and (b) of the privileges of that licence set out in Section 1 of Part A of Schedule 7;

'North Atlantic Minimum Navigation Performance Specification airspace' means the airspace prescribed as such;

* 'North Atlantic Shanwick Oceanic Control Area' means the airspace notified as such;

'Notified' means set out with the authority of the CAA in a document published by or under an arrangement entered into with the CAA and entitled 'United Kingdom Notam' or 'United Kingdom Aeronautical Information Publication' and for the time being in force;

'Notified aerodrome' means an aerodrome which is notified for the purposes of rule 45 of the Rules of the Air Regulations 2007[(a)];

'Notified operating hours' means the times notified for an aerodrome during which rule 45 of the Rules of the Air Regulations 2007 applies;

'Obstacle limitation surfaces' has the same meaning as in the document entitled 'CAP 168 Licensing of aerodromes' published by the CAA in December 2008;

'Occurrence' means an operational interruption, defect, fault or other irregular circumstance that has or may have influenced flight safety and that has not resulted in an accident or serious incident as those terms are defined in regulation 2 of the Civil Aviation (Investigation of Air Accidents and Incidents) Regulations 1996[(b)];

'Occurrence Reporting Directive' means Directive 2003/42 of the European Parliament and of the Council of 13th June 2003 on occurrence reporting in civil aviation[(c)]

'Offshore service' means an air traffic control service for any aircraft flying to or from offshore oil and gas installations and for other aircraft operating in the vicinity of these aircraft in airspace specified for this purpose in the manual of air traffic services;

'Operating staff' means the servants and agents employed by an operator of an aircraft, whether or not as members of the crew, to ensure that flights of the aircraft are conducted in a safe manner, and includes an operator who himself performs those functions;

'Operational position' means a position provided and equipped for the purpose of providing a particular type of air traffic control service;

(a) S.I. 2007/734 to which there are amendments not relevant to this provision.
(b) S.I. 1996/2798.
(c) O.J. No. L 167, 4.7.2003, p.23.

* SI 2012/1751

'Operator' has the meaning assigned to it by article 257;

'Parascending parachute' means a parachute which is towed by cable in such a manner as to cause it to ascend;

'Part 21' means the Annex so entitled to the EASA Aircraft Certification Regulation, as amended[(a)];

'Part 66' means Annex III so entitled to the EASA Continuing Airworthiness Regulation;

'Part 145' means Annex II so entitled to the EASA Continuing Airworthiness Regulation;

'Part 147' means Annex IV so entitled to the EASA Continuing Airworthiness Regulation;

* 'Part-ARA' means Annex VI so entitled to the EASA Aircrew Regulation;

'Part-FCL' means Annex I so entitled to the EASA Aircrew Regulation;

'Part-FCL licence' means a flight crew licence granted under Part-FCL by an EU Member State or a country that has an agreement with EASA or the EU to grant and administer licences in accordance with the EASA Aircrew Regulation and to be subject to standardisation by EASA in respect of that Regulation;

'Part M' means Annex I so entitled to the EASA Continuing Airworthiness Regulation as amended[(b)];

* 'Part-MED' means Annex IV so entitled to the EASA Aircrew Regulation;

'Part-ORA' means Annex VII so entitled to the EASA Aircrew Regulation;

'Passenger' means a person other than a member of the crew;

'Performance Class 1 operations' means flights where, in the event of the failure of a power unit, the helicopter will be able to safely continue the flight and land at an appropriate landing area unless the power unit failure recognition occurs during take-off at or before reaching the take-off decision point in which case the helicopter will be able to safely land back within the area from which it has taken off;

'Performance Class 2 operations' means flights where, in the event of the failure of a power unit, the helicopter will be able to safely continue the flight to an appropriate landing area or, where the failure occurs at a point during the take-off manoeuvre or the landing manoeuvre when it cannot do so, the helicopter will be able to carry out a forced landing;

'Performance Class 3 operations' means flights where, in the event of the failure of a power unit at any time during the flight, the helicopter will be required to carry out a forced landing;

'Period of duty' means the period between the commencement and end of a shift during which an air traffic controller performs, or could be called on to perform, any of the functions specified in a rating included in the controller's licence;

'Pilot in command' means a person who for the time being is in charge of the piloting of an aircraft without being under the direction of any other pilot in the aircraft;

(a) O.J. No. L 243, 27.9.2003, p.6, amended by Commission Regulation (EC) No. 375/2007 O.J. No. L 94, 4.4.2007, p.3 and to which there are other amendments not relevant to this Order.

(b) Annex I was amended by Commission Regulation (EC) No. 707/2006, O.J. No. L 122, 5.5.2006, p.17 and by Commission Regulation (EC) No. 1056/2008 of 27th October 2008 O.J. No. L283, 28.10.2008, p.5.

* SI 2012/1751

'Planned departure route' means a departure route for use by an aircraft flying in accordance with the Instrument Flight Rules which links an aerodrome or a specific runway of an aerodrome with a notified significant point from which the flight may safely continue and which is not wholly contained within controlled airspace;

'Police air operator's certificate' means a certificate granted by the CAA under article 13(5);

'Police authority' means a Chief Officer of police for any area of England or Wales, a Chief Constable for any area of Scotland and the Chief Constable of the Northern Ireland Police Service;

'Police officer' means any person who is a member of a police force or of the Northern Ireland Police Service (including, for the avoidance of doubt, the Northern Ireland Police Service Reserve), and any special constable;

'Pre-flight inspection' means the inspection carried out before flight to ensure that the aircraft is fit for the intended flight;

'Precision approach' means an instrument approach using an Instrument Landing System, Microwave Landing System or precision approach radar for guidance in both azimuth and elevation;

'Precision approach radar' means radar equipment designed to enable an air traffic controller to determine accurately an aircraft's position whilst it is carrying out an approach to land so that the air traffic controller can provide instructions and guidance to the pilot to enable the pilot to manoeuvre the aircraft relative to a defined approach path;

'Pressurised aircraft' means an aircraft provided with means of maintaining in any compartment a pressure greater than that of the surrounding atmosphere;

'Private aircraft' means an aircraft which is not an aerial work aircraft, a public transport aircraft or a commercial air transport aeroplane;

'Private flight' means a flight which is not an aerial work, public transport or commercial air transport flight;

* 'Proficiency check' means a demonstration of skill to revalidate or renew a rating, including such oral examination as the examiner may require;

'Public electronic communications network' has the same meaning as in section 151 of the Communications Act 2003[(a)];

'Public transport' has the meaning assigned to it by article 260;

'Public transport aircraft' means an aircraft flying, or intended by the operator of the aircraft to fly, for the purpose of public transport;

'Public transport flight' means a flight for the purpose of public transport;

'Public use licence' has the meaning assigned to it by article 212(3);

'Record' has the same meaning as in section 81(6) of the Transport Act 2000[(b)];

'Reduced Vertical Separation Minimum airspace' means any airspace between flight level 290 and flight level 410 inclusive which has been notified, prescribed or otherwise designated by the relevant competent authority as being airspace within which a vertical separation minimum of 1000 feet or 300 metres must be applied;

(a) 2003 c.21.
(b) 2000 c.38.

* SI 2012/1751

'Released flight' means flight by an uncontrollable balloon during which it is not attached to the surface by any form of restraining device;

'Relevant overseas territory' means any colony and any country or place outside Her Majesty's dominions in which for the time being Her Majesty has jurisdiction;

'Replacement' in relation to any part of an aircraft or its equipment:

(a) includes the removal and replacement of that part whether or not by the same part, and whether or not any work is done on it; but

(b) does not include the removal and replacement of a part which is designed to be removable solely for the purpose of enabling another part to be inspected, repaired, removed or replaced or cargo to be loaded;

'Required Navigation Performance airspace' means airspace which has been notified, prescribed or otherwise designated by the competent authority for the airspace as requiring specified navigation performance capabilities to be met by aircraft flying within it;

'Rocket' means a device which is propelled by ejecting expanding gases generated in its motor from self contained propellant and which is not dependent on the intake of outside substances and includes any part of the device intended to become separated during operation;

'Runway visual range' in relation to a runway means the distance in the direction of take-off or landing over which the runway lights or surface markings may be seen from the touchdown zone as calculated by either human observation or instruments in:

(a) the vicinity of the touchdown zone; or

(b) if this is not reasonably practicable, in the vicinity of the midpoint of the runway,

and the distance, if any, communicated to the commander of an aircraft by or on behalf of the person in charge of the aerodrome as being the runway visual range must be taken to be the runway visual range for the time being;

'Safety management system' means a systematic approach to managing safety including the necessary organisational structure, accountabilities, policies and procedures;

'Scheduled journey' means one of a series of journeys which are undertaken between the same two places and which together amount to a systematic service;

'Seaplane' has the same meaning as in section 97 of the Civil Aviation Act 1982[(a)];

** 'Sector' means a part of a control area or part of a flight information region or upper region;

'Self-launching motor glider' means an aircraft with the characteristics of a non-power-driven glider, which is fitted with one or more power units and which is designed or intended to take off under its own power;

* 'Self-propelled hang-glider' means an aircraft comprising an aerofoil wing and a mechanical propulsion device which:

(a) is foot launched;

(b) has a stall speed or minimum steady flight speed in the landing configuration not exceeding 35 knots calibrated airspeed; and

(c) has a maximum unladen mass, including full fuel, of 70kg;

(a) 1982 c.16.

* SI 2010/770
** SI 2012/1751

'Self-sustaining glider' means an aircraft with the characteristics of a non-power-driven glider which is fitted with one or more power units capable of sustaining the aircraft in flight but which is not designed or intended to take off under its own power;

** 'Service Provision Regulation' means Regulation (EC) No 550/2004 of the European Parliament and of the Council on the provision of air navigation services in the single European sky[(a)];

'Simple single engine aeroplane' means a single engine piston aeroplane with a maximum take off weight authorised of not more than 2000kg and which is not a microlight aeroplane or a SLMG;

** 'Skill test' means a demonstration of skill for licence or rating issue, including such oral examination as the examiner may require;

'SLMG' means a self-launching motor glider;

'Small balloon' means a balloon of not more than two metres in any linear dimension at any stage of its flight, including any basket or other equipment attached to the balloon;

'Small rocket' means a rocket of which the total impulse of the motor or combination of motors is not more than 10,240 Newton-seconds;

'Small unmanned aircraft' means any unmanned aircraft, other than a balloon or a kite, having a mass of not more than 20kg without its fuel but including any articles or equipment installed in or attached to the aircraft at the commencement of its flight;

'Special tasks service' means an air traffic control service:

(a) for any aircraft flying for the purposes of research and development of aircraft, aircraft equipment or aircraft systems which is not flying in accordance with normal aviation practice; and

(b) for other aircraft in the vicinity of any such aircraft;

'Special VFR flight' means a flight which is a special VFR flight for the purposes of the Rules of the Air Regulations 2007;

'SSEA' means a simple single engine aeroplane;

'Standard instrument arrival' means an arrival route for use by an aircraft flying in accordance with the instrument flight rules which links a notified significant point with a point from which an instrument approach procedure may be commenced;

'Standard instrument departure' means a departure route for use by an aircraft flying in accordance with the Instrument Flight Rules which links an aerodrome or a specific runway of an aerodrome with a notified significant point from which the flight may safely continue and which is wholly contained within controlled airspace;

* 'State aircraft' means an aircraft carrying out military, customs, police, search and rescue, firefighting, coastguard or similar activities or services;

'State of design' means the State having jurisdiction over the organisation responsible for the type design of an aircraft;

'State of the operator' means the State in which the operator of an aircraft has its principal place of business or, if it has no such place of business, its permanent residence, in circumstances where:

** (a) OJ No L 96, 31.03.2004, p.10, Council Regulation No.550/2004 was amended by Regulation (EC) No 1070/2009 of the European Parliament and the Council of 21 October 2009, OJ NoL300, 14.11.2009, p.34.

* SI 2010/770

(a) that aircraft is registered in another Contracting State;

(b) the operator is operating that aircraft under an agreement for its lease, charter or interchange or any similar arrangement;

(c) the State in which that aircraft is registered has, by agreement with the State in which the operator of the aircraft has its principal place of business or, if it has no such place of business, its permanent residence, agreed to transfer to it its functions and duties as State of registry for that aircraft in relation to, in the case of article 16(1), airworthiness, in the case of article 39(1), aircraft radio equipment, in the case of article 61, flight crew licensing or, in the case of article 112, radio licensing; and

(d) the agreement has been registered with the Council of the International Civil Aviation Organisation or the existence and scope of the agreement have been directly communicated to the CAA;

'Take-off decision point' means the latest point in the take-off at which, following recognition of a power unit failure, the helicopter will be able to carry out a rejected take-off;

'Technical Harmonisation Regulation' means Council Regulation (EEC) No. 3922/91 of 16th December 1991 on the harmonisation of technical requirements and administrative procedures in the field of civil aviation, as amended[(a)];

'Technical log' means a record containing the information specified in paragraph M.A.306 of Part M;

'Terminal control service' means an air traffic control service for any aircraft:

(a) flying in a terminal control area; or

(b) intending to fly within a terminal control area while it is in an adjacent sector specified for this purpose in the manual of air traffic services;

'Tethered flight' means flight by a controllable balloon throughout which it is flown within limits imposed by a restraining device which attaches the balloon to the surface;

'Third-country aircraft' means any aircraft, other than a State aircraft, which is not used or operated under the control of the competent authority of a Member State;

* 'Touring motor glider' means an aircraft with the characteristics of a non-power-driven glider which has one or more integrally mounted, non-retractable power units and one or more non-retractable propellers and which is designed or intended to take off under its own power;

'Type rating' means a rating that entitles the holder of a pilot licence to act as pilot of an aircraft of the type specified in the rating and the holder of a flight engineer's licence to act as flight engineer in an aircraft of the type specified in the rating;

'Uncontrollable balloon' means a balloon which is not a small balloon and which is not capable of free controlled flight;

'United Kingdom licence' means a licence included in Section 1 of Part A of Schedule 7;

(a) O.J. No. L 373, 31.12.91, p.4. The Technical Harmonisation Regulation was amended and Annex III inserted by Regulation 1899/2006 of the European Parliament and of the Council of 12 December 2006 O.J. No. L 377, 27.12.2006, p.1; an updated Annex III was inserted by Commission Regulation 859/2008 O.J. No. L 254, 20.9.2008, p.1. Council Regulation 3922/91 applies throughout the area of the EEA by virtue of the amendment of the EEA Agreement (Cm 2073 and 2183) by the Decision of the EEA Joint Committee No. 7/94 of 21.3.94 (O.J. No. L160, 28.6.94, p.1).

* SI 2012/1751

*

'Valuable consideration' means any right, interest, profit or benefit, forbearance, detriment, loss or responsibility accruing, given, suffered or undertaken under an agreement, which is of more than a nominal nature;

'Visiting force' means any such body, contingent or detachment of the forces of any country as is a visiting force for the purposes of the Visiting Forces Act 1952[(a)]:

(a) which apply to that country by virtue of paragraph (a) of section 1(1) of that Act; or

(b) which from time to time apply to that country by virtue of paragraph (b) of section 1(1) and of any Order in Council made or hereafter to be made under section 1 designating that country for the purposes of that Act following section 1(2) of that Act;

'Visual Flight Rules' means Visual Flight Rules prescribed by Section 5 of the Rules of the Air Regulations 2007[(b)];

'Visual Meteorological Conditions' means weather permitting flight in accordance with the Visual Flight Rules;

'With the surface in sight' means with the flight crew being able to see sufficient surface features or surface illumination to enable the flight crew to maintain the aircraft in a desired attitude without reference to any flight instrument and 'when the surface is not in sight' is to be construed accordingly.

(2) References in this Order to:

(a) a certificate of airworthiness include both a national certificate of airworthiness and an EASA certificate of airworthiness unless otherwise stated;

(b) an aircraft, aeroplane, powered lift tilt rotor aircraft, SLMG, helicopter, gyroplane, airship, balloon or kite include both EASA and non-EASA examples of the same unless otherwise stated.

(3) The expressions appearing in the 'Classification of Aircraft' in Part A of Schedule 3 have the meanings assigned to them in that Part.

Meaning of in flight

256 (1) An aircraft is deemed to be in flight:

(a) in the case of a piloted flying machine, from the moment when, after the embarkation of its crew for the purpose of taking off, it first moves under its own power, until the moment when it next comes to rest after landing;

(b) in the case of a pilotless flying machine, or a glider, from the moment when it first moves for the purpose of taking off, until the moment when it next comes to rest after landing;

(c) in the case of an airship, from the moment when it first becomes detached from the surface until the moment when it next becomes attached to the surface or comes to rest on the surface;

(d) in the case of a free balloon, from the moment when the balloon, including the canopy and basket, becomes separated from the surface until the moment it next comes to rest on the surface; and

(a) 1952 c.67.

(b) S.I. 2007/734 amended by S.I. 2007/1371; there are other amending instruments but none are relevant to this provision.

(e) in the case of a captive balloon, from the moment when the balloon, including the canopy and basket, becomes separated from the surface, apart from a restraining device attaching it to the surface, until the moment when it next comes to rest on the surface.

(2) The expressions 'a flight' and 'to fly' are to be construed in accordance with paragraph (1).

Meaning of operator

257 (1) Subject to paragraph (2), references in this Order to the operator of an aircraft are, for the purposes of the application of any provision of this Order in relation to any particular aircraft, references to the person who at the relevant time has the management of that aircraft.

(2) For the purposes of the application of any provision in Part 3 and Part 4, when by virtue of any charter or other agreement for the hire or loan of an aircraft a person other than the holder of a national air operator's certificate, the holder of an EU-OPS air operator certificate or an aerial work undertaking has the management of that aircraft for a period of not more than 14 days, paragraph (1) has effect as if that agreement had not been entered into.

Meaning of aerodrome traffic zone

258 (1) Subject to paragraphs (3) and (8), the aerodrome traffic zone of a notified aerodrome which is not on an offshore installation and at which the length of the longest runway is notified as 1850 metres or less is that specified in paragraph (2).

(2) The aerodrome traffic zone at an aerodrome referred to in paragraph (1) is the airspace extending from the surface to a height of 2000 feet above the level of the aerodrome within the area bounded by a circle centred on the notified mid-point of the longest runway and having a radius of two nautical miles.

(3) Paragraph (4) applies if:

(a) the aerodrome traffic zone specified in paragraph (2) would extend less than 1½ nautical miles beyond the end of any runway at the aerodrome; and

(b) this paragraph is notified as being applicable.

(4) The aerodrome traffic zone is that specified in paragraph (5) as though the length of the longest runway at the aerodrome were notified as greater than 1850 metres.

(5) Subject to paragraph (8), the aerodrome traffic zone of a notified aerodrome which is not on an offshore installation and at which the length of the longest runway is notified as greater than 1850 metres is that specified in paragraph (6).

(6) The aerodrome traffic zone is the airspace extending from the surface to a height of 2000 feet above the level of the aerodrome within the area bounded by a circle centred on the notified midpoint of the longest runway and having a radius of 2½ nautical miles.

(7) Subject to paragraph (8), the aerodrome traffic zone of a notified aerodrome which is on an offshore installation is the airspace extending from mean sea level to 2000 feet above mean sea level and within 1½ nautical miles of the offshore installation.

(8) The aerodrome traffic zone of a notified aerodrome excludes any airspace which is within the aerodrome traffic zone of another aerodrome which is notified for the purposes of this article as being the controlling aerodrome.

Meaning of aerial work

259 (1) Subject to paragraph (2) and Part 34, aerial work means any purpose, other than commercial air transport or public transport, for which an aircraft is flown if valuable consideration is given or promised for the flight or the purpose of the flight.

(2) If the only such valuable consideration consists of remuneration for the services of the pilot the flight is deemed to be a private flight for the purposes of Part 3 and Part 4.

(3) Aerial work consists of instruction or testing in a club environment if it consists of the giving of instruction in flying or the conducting of flying tests for the purposes of this Order in an aircraft owned by, operated by or operated under arrangements entered into by a flying club of which the person giving the instruction or conducting the test and the person receiving the instruction or undergoing the test are both members.

Meaning of public transport

260 (1) For the purposes of this Order and subject to Part 34, an aircraft in flight is flying on a public transport flight if the conditions specified in paragraph (2) are met.

(2) The conditions referred to in paragraph (1) are:

(a) the aircraft is not flying on a commercial air transport flight; and

(b) that

(i) valuable consideration is given or promised for the carriage of passengers or cargo in the aircraft on that flight; or

(ii) the flight is operated by the holder of a national air operator's certificate or an EU-OPS air operator certificate and any passengers or cargo are carried gratuitously in the aircraft except for persons specified in paragraph (3) or cargo specified in paragraph (4).

(3) The persons referred to in paragraph (2)(b)(ii) are persons in the employment of the operator (including, in the case of a body corporate, its directors), or persons authorised by the CAA either making any inspection or witnessing any training, practice or test for the purposes of this Order or EU-OPS.

(4) The cargo referred to in paragraph (2)(b)(ii) is cargo intended to be used by any persons specified in paragraph (3) or by the operator.

INTENTIONALLY LEFT BLANK

PART 34 PUBLIC TRANSPORT AND AERIAL WORK

Application of Part

261 Nothing in this Part applies to a commercial air transport flight.

Public transport – special rules for hire of aircraft

262 (1) Subject to the provisions of this article and this Part, an aircraft in flight is deemed to fly for the purpose of public transport for the purposes of Part 3 and Part 4 (other than articles 37(2) and 39(2)), if valuable consideration is given or promised for the primary purpose of conferring on a particular person the right to fly the aircraft on that flight.

(2) Paragraph (1) does not apply to any single-seat aircraft which has a maximum total weight authorised of not more than 910kg otherwise than under a hire-purchase or conditional sale agreement.

(3) Paragraph (1) does not apply if the only such valuable consideration is paid under a hire-purchase or conditional sale agreement.

(4) Notwithstanding that an aircraft may be flying for the purpose of public transport by reason of paragraph (1), it is not flying for the purpose of the public transport of passengers unless valuable consideration is given or promised for the carriage of those passengers.

(5) A glider is not flying for the purpose of public transport for the purposes of Part 3 and Part 4 by virtue of paragraph (1) if the valuable consideration given or promised for the primary purpose of conferring on a particular person the right to fly the glider on that flight is given or promised by a member of a flying club and the glider is owned or operated by that flying club.

(6) Notwithstanding the giving or promising of valuable consideration specified in paragraph (1) for the flight or the purpose of the flight it is a private flight:

(a) subject to sub-paragraph (b), for all purposes other than Part 3 and Part 4; and

(b) for the purposes of articles 37(2) and 39(2).

Public transport – special rule for associations of persons

263 (1) A transaction is effected in accordance with this paragraph if, under a transaction effected by or on behalf of a member of an association of persons on the one hand and the association of persons or any member of the association on the other hand, a person is carried in, or is given the right to fly, an aircraft in such circumstances that valuable consideration would be given or promised if the transaction were effected in a different manner.

(2) If a transaction is effected in accordance with paragraph (1) valuable consideration is, for the purposes of this Order, deemed to have been given or promised, notwithstanding any rule of law as to such transactions.

Public transport – special rule for groups of companies

* | **264** (1) For the purposes of article 260(2)(b)(i), there is to be disregarded any valuable consideration given or promised for a flight or the purpose of a flight by one company to another company which is:

(a) its holding company;

(b) its subsidiary; or

(c) another subsidiary of the same holding company.

* SI 2012/1751

(2) In this article 'holding company' and 'subsidiary' have the meanings respectively specified in Section 1159 of the Companies Act 2006[(a)].

Public transport and aerial work – exceptions – flying displays

265 (1) A flight is, for the purposes of Part 7, a private flight if:

(a) the flight is of a sort described in paragraph (2); and

(b) the only valuable consideration for the flight or the purpose of the flight is of a sort described in paragraph (3).

(2) A flight is of a sort described in this paragraph if it is:

(a) wholly or principally for the purpose of taking part in an aircraft race, contest or flying display;

(b) for the purpose of positioning the aircraft for such a flight as is specified in sub-paragraph (a) and is made with the intention of carrying out such a flight; or

(c) for the purpose of returning after such a flight as is specified in sub-paragraph (a) to a place at which the aircraft is usually based.

(3) Valuable consideration is of a sort described in this paragraph if it is one or more of the following:

(a) valuable consideration specified in article 262(1);

(b) in the case of an aircraft owned in accordance with article 269(2), valuable consideration which falls within article 269(3);

(c) valuable consideration given or promised to the owner or operator of an aircraft taking part in such a race, contest or flying display and such valuable consideration is not more than the direct costs of the flight and a contribution to the annual costs of the aircraft which contribution must bear no greater proportion to the total annual costs of the aircraft than the duration of the flight bears to the annual flying hours of the aircraft; or

(d) one or more prizes awarded to the pilot in command of an aircraft taking part in an aircraft race or contest to a value which must not exceed £500 for any one race or contest except with the permission of the CAA granted to the organiser of the race or contest.

(4) Any prize falling within paragraph (3)(d) is deemed for the purposes of this Order not to constitute remuneration for services as a pilot.

Public transport and aerial work – exceptions – charity flights

266 (1) Subject to paragraph (2), a flight is a private flight if the only valuable consideration given or promised for the flight or the purpose of the flight is one or more of the following:

(a) valuable consideration specified in article 262(1);

(b) in the case of an aircraft owned in accordance with article 269(2), valuable consideration which falls within article 269(3); or

(c) valuable consideration given or promised to a registered charity which is not the operator of the aircraft and the flight is made with the permission of the CAA and in accordance with any conditions specified in it.

(2) If valuable consideration specified in article 262(1) is given or promised the flight is a public transport flight for the purposes of Part 3 and Part 4 (other than articles 37(2) and 39(2)).

(a) 2006 c.46.

Public transport and aerial work – exceptions – cost sharing

267 (1) Subject to paragraph (4), a flight is a private flight if:

(a) the only valuable consideration given or promised for the flight or the purpose of the flight is of a sort described in paragraph (2); and

(b) the criteria in paragraph (3) are satisfied.

(2) Valuable consideration is of a sort described in this paragraph if it is one or more of the following:

(a) valuable consideration specified in article 262(1);

(b) in the case of an aircraft owned in accordance with article 269(2), valuable consideration which falls within article 269(3); or

(c) a contribution to the direct costs of the flight otherwise payable by the pilot in command.

(3) The criteria in this paragraph are satisfied if:

(a) no more than four persons (including the pilot) are carried;

(b) the proportion which the contribution referred to in paragraph (2)(c) bears to the direct costs is not more than the proportion which the number of persons carried on the flight (excluding the pilot) bears to the number of persons carried (including the pilot);

(c) no information has been published or advertised before the commencement of the flight other than, in the case of an aircraft operated by a flying club, advertising wholly within the premises of such a flying club in which case all the persons carried on such a flight who are aged 18 years or over must be members of that flying club; and

(d) no person acting as a pilot is employed as a pilot by, or is a party to a contract for the provision of services as a pilot with, the operator of the aircraft which is being flown.

(4) If valuable consideration specified in article 262(1) is given or promised the flight is a public transport flight for the purposes of Part 3 and Part 4 (other than articles 37(2) and 39(2)).

Public transport and aerial work – exceptions – recovery of direct costs

268 (1) Subject to paragraphs (2) and (3), a flight is a private flight if the only valuable consideration given or promised for the flight or the purpose of the flight is one or more of the following:

(a) valuable consideration specified in article 262(1);

(b) in the case of an aircraft owned in accordance with article 269(2), valuable consideration which falls within article 269(3); or

(c) the payment of the whole or part of the direct costs otherwise payable by the pilot in command by or on behalf of the employer of the pilot in command, or by or on behalf of a body corporate of which the pilot in command is a director.

(2) Neither the pilot in command nor any other person who is carried is legally obliged, whether under a contract or otherwise, to be carried on the flight.

(3) If valuable consideration specified in article 262(1) is given or promised the flight is a public transport flight for the purposes of Part 3 and Part 4 (other than articles 37(2) and 39(2)).

Public transport and aerial work – exceptions – jointly owned aircraft

269 (1) A flight is a private flight if the aircraft falls within paragraph (2) and the only valuable consideration given or promised for the flight or the purpose of the flight falls within paragraph (3).

(2) An aircraft falls within this paragraph if it is owned:

(a) jointly by persons (each of whom is a natural person) who each hold not less than a 5% beneficial share and:

(i) the aircraft is registered in the names of all the joint owners; or

(ii) the aircraft is registered in the name or names of one or more of the joint owners as trustee or trustees for all the joint owners and written notice has been given to the CAA of the names of all the persons beneficially entitled to a share in the aircraft; or

(b) by a company in the name of which the aircraft is registered and the registered shareholders of which (each of whom is a natural person) each hold not less than 5% of the shares in that company.

(3) Valuable consideration falls within this paragraph if it is given or promised by one or more of the joint owners of the aircraft or registered shareholders of the company which owns the aircraft and is either or both:

(a) in respect of and no greater than the direct costs of the flight; or

(b) in respect of the annual costs.

Public transport and aerial work – exceptions – parachuting

270 A flight is an aerial work flight if it is a flight in respect of which valuable consideration has been given or promised for the carriage of passengers and which is for the purpose of:

(a) the dropping of persons by parachute and which is made under and in accordance with the terms of a parachuting permission granted by the CAA under article 130;

(b) positioning the aircraft for such a flight as is specified in sub-paragraph (a) and which:

(i) is made with the intention of carrying out such a flight; and

(ii) on which no person is carried who it is not intended to carry on such a flight and who may be carried on such a flight in accordance with the terms of a parachuting permission granted by the CAA under article 130; or

(c) returning after such a flight as is specified in sub-paragraph (a) to the place at which the persons carried on such a flight are usually based and on which flight no persons are carried other than persons carried on the flight specified in sub-paragraph (a).

Judith Simpson

Clerk of the Privy Council

SCHEDULE 1 **Article 2**

REVOCATIONS

SI number	Title	Extent of revocation
2005/1970	The Air Navigation Order 2005	The whole instrument
2006/1384	The Civil Aviation (Safety of Third-Country Aircraft) Regulations 2006	Regulations 14 to 17
2006/2316	The Air Navigation (Amendment) Order 2006	The whole instrument
2007/274	The Air Navigation (Amendment) Order 2007	The whole instrument
2007/3467	The Air Navigation (Amendment)(No.2) Order 2007	The whole instrument
2008/1782	The Air Navigation (Amendment) Order 2008	The whole instrument
2009/41	The Operation of Air Services in the Community Regulations 2009	Regulation 37
2009/1742	The Air Navigation (Amendment) Order 2009	The whole instrument

INTENTIONALLY LEFT BLANK

SCHEDULE 2 **Articles 3(3), 16(2), 18(3) and 128(7)**

A AND B CONDITIONS AND CATEGORIES OF CERTIFICATE OF AIRWORTHINESS

PART A

SECTION 1

A Conditions

1 A non-EASA aircraft registered in the United Kingdom may fly for a purpose set out in paragraph 2 or 3 subject to the conditions contained in paragraphs 4 to 7 when either:

a it does not have a certificate of airworthiness duly issued or rendered valid under the law of the United Kingdom; or

b the certificate of airworthiness or the certificate of validation issued under article 18 issued for the aircraft has ceased to be in force by virtue of any of the matters specified in article 19.

2 The purposes in the case of an aircraft falling within sub-paragraph 1(a) are that the aircraft may fly only so as to enable it to:

a qualify for the issue, renewal or validation of a certificate of airworthiness after an application has been made for such issue, renewal or validation, or carry out a functional check of a previously approved modification of the aircraft;

b proceed to or from a place at which any inspection, repair, modification, maintenance, approval, test or weighing of, or the installation of equipment in, the aircraft is to take place or has taken place for a purpose referred to in sub-paragraph (a), after any relevant application has been made, or at which the installation of furnishings in, or the painting of, the aircraft is to be undertaken; or

c proceed to or from a place at which the aircraft is to be or has been stored.

3 The purposes in the case of an aircraft falling within sub-paragraph 1(b) are that the aircraft may fly only so as to enable it to:

a proceed to a place at which any maintenance or inspection required by article 19(1)(b) is to take place; or

b proceed to a place at which any maintenance, inspection or modification required by article 19(1)(c), (d) or (e) is to take place and for which flight the CAA has given permission in writing; or

c carry out a functional check, test or in-flight adjustment in connection with the carrying out in a manner approved by the CAA of any overhaul, repair, previously approved modification, inspection or maintenance required by article 19.

4 The aircraft, including any modifications, must be of a design which previously has been approved by the CAA, or by an organisation approved for that purpose by the CAA, as being compliant with a standard accepted by the CAA as appropriate for the issue of a national certificate of airworthiness.

5 The aircraft and its engines must be certified as fit for flight by the holder of an aircraft maintenance engineer's licence granted under this Order, being a licence which entitles the holder to issue that certificate or by a person approved by the CAA for the purpose of issuing certificates under this condition, and in accordance with that approval.

6 The aircraft must carry the minimum flight crew specified in any certificate of airworthiness or validation or flight manual which has previously been in force under this Order for the aircraft, or is or has previously been in force for any other aircraft of identical design.

7 The aircraft must not carry any persons or cargo except persons performing duties in the aircraft in connection with the flight or persons who are carried in the aircraft to perform duties in connection with a purpose specified in paragraph 2 or 3.

8 For the purpose of this Schedule 'a previously approved modification' means a modification which has previously been approved by the CAA or by an organisation approved for that purpose by the CAA for that aircraft or another aircraft of the same type.

SECTION 2

B Conditions

1 A non-EASA aircraft may fly for a purpose set out in paragraph 2 subject to the conditions set out in paragraphs 3 to 6 whether or not it is registered in accordance with article 3(1) when there is not in force:

a in the case of an aircraft which is so registered, a certificate of airworthiness duly issued or rendered valid under the law of the country in which the aircraft is registered; or

b in the case of an aircraft which is not so registered, either a certificate of airworthiness duly issued or rendered valid under the law of the United Kingdom or a permit to fly issued by the CAA for that aircraft.

2 The purposes referred to in paragraph 1 are:

a experimenting with or testing the aircraft (including any engines installed on the aircraft) or any equipment installed or carried in the aircraft;

b enabling the aircraft to qualify for the issue or validation of a certificate of airworthiness or the approval of a modification of the aircraft or the issue of a permit to fly;

c demonstrating and displaying the aircraft, any engines installed on the aircraft or any equipment installed or carried in the aircraft with a view to its sale or of other similar aircraft, engines or equipment;

d demonstrating and displaying the aircraft to employees of the operator;

e the giving of flying training to or the testing of flight crew employed by the operator or the training or testing of other persons employed by the operator and who are carried or are intended to be carried under sub-paragraph 6(a);

f proceeding to or from a place at which any experiment, inspection, repair, modification, maintenance, approval, test or weighing of the aircraft, the installation of equipment in the aircraft, demonstration, display or training is to take place for a purpose referred to in sub-paragraph (a), (b), (c), (d) or (e); or

g proceeding to or from a place at which the installation of furnishings in, or the painting of the aircraft is to be undertaken.

3 The flight must be operated by a person approved by the CAA for the purposes of these conditions and subject to any additional conditions which may be specified in such an approval.

4 If not registered in the United Kingdom:

a the aircraft must be marked in a manner approved by the CAA for the purposes of these conditions; and

b articles 34, 39, 43(3), 86, 87, 112, 150 and 156 must be complied with in relation to the aircraft as if it were registered in the United Kingdom.

5 No person may act as pilot in command of the aircraft except a person approved for the purpose by the CAA.

6 The aircraft must not carry any cargo, or any persons other than the flight crew except the following:

a persons employed by the operator who during the flight carry out duties or are tested or receive training in connection with a purpose specified in paragraph 2;

b persons acting on behalf of the manufacturers of component parts of the aircraft (including its engines) or of equipment installed in or carried in the aircraft for carrying out during the flight duties in connection with a purpose so specified;

c persons approved by the CAA under article 244 as qualified to supply reports for the purposes of article 18;

d persons other than those carried under the preceding provisions of this paragraph who are carried in the aircraft in order to carry out a technical evaluation of the aircraft or its operation;

e cargo which comprises equipment carried in connection with a purpose specified in sub-paragraph 2(f); or

f persons employed by the operator or persons acting on behalf of the manufacturers of component parts of the aircraft (including its engines) or of equipment installed in or carried in the aircraft in connection with a purpose specified in sub-paragraph 2(f) which persons have duties in connection with that purpose.

PART B

Categories of certificate of airworthiness and purposes for which aircraft may fly

Category of certificate of airworthiness	**Purposes for which the aircraft may fly**
Standard	Any purpose
Special Category	Any purpose, other than commercial air transport or public transport, specified in the certificate of airworthiness but not including the carriage of passengers unless expressly permitted

INTENTIONALLY LEFT BLANK

SCHEDULE 3

CLASSIFICATION AND MARKING OF AIRCRAFT AND DEALER CERTIFICATION

PART A **Articles 6(1)(b) and 255(3)**

Classification of aircraft

Col. 1	Col. 2	Col. 3
(1) Lighter than air aircraft	(a) Non-power driven	(i) Free Balloon (ii) Captive Balloon
	(b) Power driven	(i) Airship
(2) Heavier than air aircraft	(a) Non-power driven	(i) Glider (ii) Kite
	(b) Power driven flying machines	(i) Aeroplane (Landplane) (ii) Aeroplane (Seaplane) (iii) Aeroplane (Amphibian) (iv) Aeroplane (Self-launching Motor Glider) (v) Powered Lift (Tilt Rotor) (vi) Rotorcraft (aa) Helicopter (bb) Gyroplane

PART B **Article 6(5)(b) and (6)**

Conditions in aircraft dealer's certificate

1 The operator of the aircraft must be the registered owner of the aircraft and the holder of an aircraft dealer's certificate granted under this Order.

2 The aircraft may fly only for the purpose of:

g testing the aircraft;

h demonstrating the aircraft with a view to the sale of that aircraft or of other similar aircraft;

i proceeding to or from a place at which the aircraft is to be tested or demonstrated as aforesaid, or overhauled, repaired or modified;

j delivering the aircraft to a person who has agreed to buy, lease or sell it; or

k proceeding to or from a place for the purpose of storage.

3 Without prejudice to article 86 the operator of the aircraft must be satisfied before the aircraft takes off that the aircraft is in every way fit for the intended flight.

4 The aircraft may fly only within the United Kingdom.

PART C **Article 10(2)**

Nationality and registration marks of aircraft registered in the United Kingdom

General

1 (1) The nationality mark of the aircraft is the capital letter 'G' in Roman character.

(2) The registration mark is a group of four capital letters in Roman character assigned by the CAA on the registration of the aircraft.

(3) The letters must be without ornamentation.

(4) A hyphen must be placed between the nationality mark and the registration mark.

(5) The nationality and registration marks must be displayed to the best advantage, taking into consideration the constructional features of the aircraft and must always be kept clean and visible.

(6) The letters constituting each group of marks must:

(a) be of equal height; and

(b) together with the hyphen, all be of the same single colour which must clearly contrast with the background on which they appear.

(7) The nationality and registration marks must also be inscribed on a fire-proof metal plate affixed in a prominent position:

(a) in the case of a microlight aeroplane, either on the fuselage or car or on the wing;

(b) in the case of a balloon, on the basket or envelope; or

(c) in the case of any other aircraft on the fuselage or car.

(8) The nationality and registration marks must be painted on the aircraft, or affixed to the aircraft by any other means ensuring a similar degree of permanence, in the manner specified in paragraphs 2, 3 and 4 of this Part.

Position and size of marks – heavier than air aircraft

2 (1) The position and size of marks on heavier than air aircraft (excluding kites) must be as specified in this paragraph.

(2) On such aircraft having a fixed wing surface:

(a) the marks must appear on the lower horizontal surface of the wing structure and on the port wing unless they extend across the whole surface of both wings;

(b) so far as is possible the marks must be located equidistant from the leading and trailing edges of the wings;

(c) the tops of the letters must be towards the leading edge of the wing;

(d) the height of the letters must be:

(i) subject to sub-paragraph (ii), at least 50 centimetres;

(ii) if the wings are not large enough for the marks to be 50 centimetres in height, marks of the greatest height practicable in the circumstances.

(3) On the fuselage (or equivalent structure) and vertical tail surfaces of such aircraft:

(a) the marks must also appear either:

(i) on each side of the fuselage (or equivalent structure), and must, in the case of fixed wing aircraft be located between the wings and the horizontal tail surface; or

(ii) on the vertical tail surfaces;

(b) when located on a single vertical tail surface, the marks must appear on both sides;

(c) when located on multi-vertical tail surfaces, the marks must appear on the outboard sides of the outer-surfaces;

(d) subject to sub-paragraphs (f) and (g), the height of the letters constituting each group of marks must be at least 30 centimetres;

(e) if one of the surfaces authorised for displaying the required marks is large enough for those marks to be 30 centimetres in height (whilst complying with sub-paragraph (g)) and the other is not, marks of 30 centimetres in height must be placed on the largest authorised surface;

(f) if neither authorised surface is large enough for marks of 30 centimetres in height (whilst complying with sub-paragraph (g)), marks of the greatest height practicable in the circumstances must be displayed on the larger of the two authorised surfaces;

(g) marks on the vertical tail surfaces must be such as to leave a margin of at least five centimetres along each side of the vertical tail surface.

(4) On rotary wing aircraft where owing to the structure of the aircraft the greatest height practicable for the marks on the side of the fuselage (or equivalent structure) is less than 30 centimetres:

(a) the marks must also appear on the lower surface of the fuselage as close to the line of symmetry as practicable;

(b) they must be placed with the tops of the letters towards the nose;

(c) the height of the letters constituting each group of marks must be:

(i) subject to sub-paragraph (ii), at least 50 centimetres; or

(ii) if the lower surface of the fuselage is not large enough for the marks to be of 50 centimetres in height, marks of the greatest height practicable in the circumstances.

(5) Wherever in this paragraph marks of the greatest height practicable in the circumstances are required, that height must be such as is consistent with compliance with paragraph 4 of this Part.

Position and size of marks – airships and free balloons

3 (1) The position and size of marks on airships and free balloons must be as specified in this paragraph.

(2) In the case of airships the marks must be:

(a) placed on each side of the airship; and

(b) placed horizontally either on the hull near the maximum cross-section of the airship or on the lower vertical stabiliser.

(3) In the case of free balloons, the marks must be in two places on diametrically opposite sides of the balloon.

(4) In the case of both airships and free balloons:

(a) the side marks must be so placed as to be visible from the sides and from the ground; and

(b) the height of the letters must be at least 50 centimetres.

Width, spacing and thickness of marks

4 (1) For the purposes of this paragraph:

(a) 'standard letter' means any letter other than the letters I, M and W;

(b) the width of each standard letter and the length of the hyphen between the nationality mark and the registration mark must be two thirds of the height of a letter;

(c) the width of the letters M and W must be neither less than two thirds of their height nor more than their height; and

(d) the width of the letter I must be one sixth of the height of the letter.

(2) The thickness of the lines comprising each letter and hyphen must be one sixth of the height of the letters forming the marks.

(3) (a) Each letter and hyphen must be separated from the letter or hyphen which it immediately precedes or follows by a space equal to either one quarter or one half of the width of a standard letter.

(e) Each such space must be equal to every other such space within the marks.

SCHEDULE 4 **ARTICLES 28(6) AND 37(2)**

AIRCRAFT EQUIPMENT

1 (1) Every aircraft of a description specified in the first column of the Table in paragraph 4 which must carry equipment specified in this Schedule must be provided, if flying in the circumstances specified in the second column of the said Table, with adequate equipment.

(2) For the purpose of this paragraph the expression 'adequate equipment' means, subject to sub-paragraphs (3) and (4), the scales of equipment respectively indicated in the third column of that Table.

(3) If the aircraft is flying in a combination of such circumstances, the scales of equipment are not on that account required to be duplicated.

(4) Equipment carried in an aircraft that is necessary for the airworthiness of the aircraft is to be taken into account in determining whether this Schedule is complied with for that aircraft.

2 (1) For the purposes of the Table in paragraph 4 flying time in relation to a helicopter or gyroplane is to be calculated on the assumption that it is flying in still air at the speed specified in the relevant flight manual as the speed for compliance with regulations governing flights over water.

(2) In this Schedule 'day' means the time from half an hour before sunrise until half an hour after sunset (both times exclusive), sunset and sunrise being determined at surface level.

3 The following items of equipment are not required to be of a type approved by EASA or the CAA:

(a) the equipment referred to in Scale A(2);

(b) first aid equipment and handbook, referred to in Scale A(3);

(c) time-pieces, referred to in Scale F;

(d) torches, referred to in Scales G and K;

(e) whistles and survivor locator lights, referred to in Scale H;

(f) sea anchors, referred to in Scales J and K;

(g) rocket signals, referred to in Scale J;

(h) equipment for mooring, anchoring or manoeuvring aircraft on the water, referred to in Scale J;

(i) paddles, referred to in Scale K;

(j) food and water, referred to in Scales K, U and V;

(k) first aid equipment, referred to in Scales K, U and V;

(l) stoves, cooking utensils, snow shovels, ice saws, sleeping bags and Arctic suits, referred to in Scale V;

(m) megaphones, referred to in Scale Y.

4 Table

Description of Aircraft	Circumstances of Flight	Scale of Equipment Required
(1) Gliders	a) flying for purposes other than public transport or aerial work; and flying by night	A(2)
	b) flying for the purpose of public transport or aerial work and	A, B(1), (2), (3), (4), (5), (6) and (7), D and F(1)
	i) flying by night	C and G
	ii) carrying out aerobatic manoeuvres	B(8) and (9)
(2) Aeroplanes	a) flying for purposes other than commercial air transport or public transport and	A(1) and (2) and B(1), (2), (3), (4), (5) and (6)
	i) flying by night	C, D, G(2) and (3) and GG
	ii) flying under Instrument Flight Rules	
	aa) outside controlled airspace	D
	bb) within Class A, B or C airspace	E with E(4) duplicated and F
	cc) within Class D and E airspace	E and F
	iii) carrying out aerobatic manoeuvres	B(8) and (9)
	iv) flying at a height of 13,000 ft or more above mean sea level	L1 or L2
	v) flying over water	
	aa) beyond gliding distance from land suitable for an emergency landing	H
	bb) at a distance of more than 10 minutes flying time at normal cruising speed away from land suitable for making an emergency landing	KK(1) or KK(2)
	vi) flying over areas which have been designated by the State concerned as areas in which search and rescue would be especially difficult, and where	KK(2)

Description of Aircraft	Circumstances of Flight	Scale of Equipment Required
(2) Aeroplanes (contd.)	aa) in the event of an emergency landing, tropical conditions are likely to be met	U (except U(1))
	bb) in the event of an emergency landing, polar conditions are likely to be met	V (except V(1))
	vii) on all flights which involve manoeuvres on water	H, J and K(1), (2) and (3)
	viii) with a certificate of airworthiness	A(3) and (5)
	b) flying for the purpose of public transport and	A, B(1), (2), (3), (4), (5), (6) and (7), D and F(1)
	i) flying under Instrument Flight Rules except flights outside controlled airspace in the case of aeroplanes having a maximum total weight authorised of not more than 1150kg	E with E(4) duplicated and F
	ii) flying by night	
	aa) in the case of aeroplanes which have a maximum total weight authorised not exceeding 1150kg	C and G
	bb) in the case of aeroplanes which have a maximum total weight authorised exceeding 1150kg	C and G, E with E(4) duplicated and F
	iii) flying over water beyond gliding distance from land	H
	iv) on all flights on which in the event of any emergency occurring during the take-off or during the landing at the intended destination or any likely alternate destination it is reasonably possible that the aeroplane would be forced to land onto water	H

Description of Aircraft	Circumstances of Flight	Scale of Equipment Required
(2) Aeroplanes (contd.)	v) flying over water	
	aa) in the case of aeroplanes capable of continuing the flight to an aerodrome with the critical power unit becoming inoperative, at a greater distance from land suitable for making an emergency landing than that corresponding to 120 minutes at cruising speed or 400 nautical miles, whichever is the lesser or	H and K
	bb) in the case of all other aeroplanes, at a greater distance from land suitable for making an emergency landing than that corresponding to 30 minutes at cruising speed or 100 nautical miles, whichever is the lesser	H and K
	vi) having a certificate of airworthiness first issued (whether in the United Kingdom or elsewhere) before 1st January 2002	KK(1) or (2)
	vii) having a certificate of airworthiness first issued (whether in the United Kingdom or elsewhere) on or after 1st January 2002	KK(2)
	viii) on all flights which involve manoeuvres on water	H, J and K
	ix) flying at a height of 10,000 ft or more above mean sea level	
	aa) having a certificate of airworthiness first issued (whether in the United Kingdom or elsewhere) before 1st January 1989	L1 or L2
	bb) having a certificate of airworthiness first issued (whether in the United Kingdom or elsewhere) on or after 1st January 1989	L2

Description of Aircraft	Circumstances of Flight	Scale of Equipment Required
(2) Aeroplanes (contd.)	x) on flights when the weather reports or forecasts available at the aerodrome at the time of departure indicate that conditions favouring ice formation are likely to be met	M
	xi) carrying out aerobatic manoeuvres	B(8) and (9)
	xii) on all flights on which the aircraft carries a flight crew of more than one person	N
	xiii) on all flights for the purpose of the public transport of passengers	Q and Y(1), (2) and (3)
	xiv) on all flights by a pressurised aircraft	R
	xv) flying over substantially uninhabited land areas where, in the event of an emergency landing, tropical conditions are likely to be met	U
	xvi) flying over substantially uninhabited land or other areas where, in the event of an emergency landing, polar conditions are likely to be met	V
	xvii) flying at an altitude of more than 49,000 ft	W
(3) Turbine-jet aeroplanes having a maximum total weight authorised of more than 5700kg or pressurised aircraft having a maximum total weight authorised of more than 11,400kg	flying for the purpose of public transport	O
(4) Turbine-engined aeroplanes having a maximum total weight authorised of more than 5700kg and piston-engined aeroplanes having a maximum total weight authorised of more than 27,000kg except for such aeroplanes falling within paragraphs (5) or (6);		
(a) which are operated by an the holder of a national air operator's certificate; or an EU-OPS air operator certificate; or	flying on any flight	P

Description of Aircraft	Circumstances of Flight	Scale of Equipment Required
(b) which are public transport aeroplanes for which application has been made and not withdrawn or refused for a certificate of airworthiness, and which fly under an EASA permit to fly, the A Conditions or under a certificate of airworthiness in the Special Category described in Part B of Schedule 2	flying on any flight	P
(5) Public transport aeroplanes for which there is in force a certificate of airworthiness and public transport aeroplanes for which an application has been made and not withdrawn or refused for a certificate of airworthiness, and which fly under an EASA permit to fly, the A Conditions or under a certificate of airworthiness in the Special Category described in Part B of Schedule 2 except for such aeroplanes falling within paragraph (6);		
(a) which conform to a type first issued with a type certificate (whether in the United Kingdom or elsewhere) on or after 1st April 1971 and which have a maximum total weight authorised of more than 5700kg but of not more than 11,400kg; or	flying on any flight	S(1)
(b) which conform to a type first issued with a type certificate (whether in the United Kingdom or elsewhere) on or after 1st April 1971 and which have a maximum total weight authorised of more than 11,400kg but not more than 27,000kg; or	flying on any flight	S(2)
(c) which conform to a type first issued with a type certificate (whether in the United Kingdom or elsewhere) on or after 1st April 1971 and which have a maximum total weight authorised of more than 27,000kg but not more than 230,000kg; or	flying on any flight	S(3)

Description of Aircraft	Circumstances of Flight	Scale of Equipment Required
(d) which conform to a type first issued with a type certificate in the United Kingdom on or after 1st January 1970 and which have a maximum total weight authorised of more than 230,000kg	flying on any flight	S(3)
(6) Public transport aeroplanes for which there is in force a certificate of airworthiness and public transport aeroplanes for which application has been made and not withdrawn or refused for a certificate of airworthiness, and which fly under an EASA permit to fly, the A Conditions or under a certificate of airworthiness in the Special Category described in Part B of Schedule 2		
(a) for which an individual certificate of airworthiness was first issued (whether in the United Kingdom or elsewhere) on or after 1st June 1990 and which have a maximum total weight authorised of not more than 5700kg, are powered by two or more turbine engines and with a maximum approved passenger seating configuration of more than 9; or	flying on any flight	S(4)
(b) for which an individual certificate of airworthiness was first issued (whether in the United Kingdom or elsewhere) on or after 1st June 1990 and which have a maximum total weight authorised of more than 5700kg but not more than 27,000kg; or	flying on any flight	S(5)
(c) for which an individual certificate of airworthiness was first issued (whether in the United Kingdom or elsewhere) on or after 1st June 1990 and which have a maximum total weight authorised of more than 27,000kg	flying on any flight	S(6)

Description of Aircraft	Circumstances of Flight	Scale of Equipment Required
(7) Aerial work and private aeroplanes for which an individual certificate of airworthiness was first issued (whether in the United Kingdom or elsewhere) on or after 1st June 1990 and which have a maximum total weight authorised of more than 27,000kg	flying on any flight	S(6)
(8) Public transport aeroplanes		
(a) which conform to a type first issued with a type certificate (whether in the United Kingdom or elsewhere) on or after 1st April 1971 and having a maximum total weight authorised of more than 27,000kg; or	flying on any flight	T
(b) which conform to a type first issued with a type certificate in the United Kingdom on or after 1st January 1970 and which have a maximum total weight authorised of more than 230,000kg and for which there is in force a certificate of airworthiness; or	flying on any flight	T
(c) having a maximum total weight authorised of more than 27,000kg which conform to a type first issued with a type certificate on or after 1st April 1971 (or 1st January 1970 in the case of an aeroplane having a maximum total weight authorised of more than 230,000kg) for which application has been made and not withdrawn or refused for a certificate of airworthiness, and which fly under an EASA permit to fly, the A Conditions or under a certificate of airworthiness in the Special Category described in Part B of Schedule 2	flying on any flight	T

Description of Aircraft	Circumstances of Flight	Scale of Equipment Required
(9) Aeroplanes powered by one or more turbine jets or one or more turbine propeller engines and which have a maximum total weight authorised of more than 15,000kg or with a maximum approved passenger seating configuration of more than 30	flying for the purpose of public transport	X(1)
(10)Aeroplanes which are powered by one or more turbine jets or one or more turbine propeller engines and which have a maximum total weight authorised of more than 5700kg but not more than 15,000kg or with a maximum approved passenger seating configuration of more than 9 but not more than 30	flying for the purpose of public transport except when flying under and in accordance with the terms of a police air operator's certificate	X(1)
(11) Aeroplanes which are powered by one or more turbine jets or one or more turbine propeller engines and which have a maximum total weight authorised of more than 5700kg or with a maximum approved passenger seating configuration of more than 9 for which there is in force a certificate of airworthiness	flying for purposes other than commercial air transport or public transport	X(1) or X(2)
(12) Aeroplanes		
(a) powered by one or more turbo-jets and which have a maximum total weight authorised of more than 22,700kg; or	flying by night for the purpose of the public transport of passengers	Z(1) and (2)
(b) having a maximum total weight authorised of more than 5700kg and which conform to a type for which a certificate of airworthiness was first applied for (whether in the United Kingdom or elsewhere) after 30th April 1972 but not including any aeroplane which in the opinion of the CAA is identical in all matters affecting the provision of emergency evacuation facilities to an aeroplane for which a certificate of airworthiness was first applied for before that date; or	flying by night for the purpose of the public transport of passengers	Z(1) and (2)

Description of Aircraft	Circumstances of Flight	Scale of Equipment Required
(c) with a maximum approved passenger seating configuration of more than 19; or	flying by night for the purpose of the public transport of passengers	Z(1)
(d) having a maximum total weight authorised of more than 5700kg and which conform to a type for which a certificate of airworthiness was first applied for (whether in the United Kingdom or elsewhere) after 30th April 1972 but not including any aeroplane which in the opinion of the CAA is identical in all matters affecting the provision of emergency evacuation facilities to an aeroplane for which a certificate of airworthiness was first applied for before that date; or	flying for the purpose of the public transport of passengers	Z(3)
(e) powered by one or more turbo-jets and which have a maximum total weight authorised of more than 22,700kg; or	flying for the purpose of the public transport of passengers	Z(3)
(f) first issued with a type certificate (whether in the United Kingdom or elsewhere) on or after 1st January 1958 and with a maximum approved passenger seating configuration of more than 19	flying for the purpose of the public transport of passengers	Z(3)
(13)Aeroplanes;		
(a) powered by one or more turbine jets	flying on any flight other than commercial air transport	AA
(b) powered by one or more turbine propeller engines and having a maximum total weight authorised of more than 5700kg and first issued with a certificate of airworthiness in the United Kingdom on or after 1st April 1989	flying on any flight other than commercial air transport	AA
(14) Public transport aeroplanes	flying for the purpose of the public transport of passengers	Y(4)
(15) Helicopters and Gyroplanes	(a) flying for purposes other than public transport and	A(1), (2), (3) and (5) and B(1), (2), (3), (4), (5) and (6)

Description of Aircraft	Circumstances of Flight	Scale of Equipment Required
(15) Helicopters and Gyroplanes (contd.)	(i) flying by day under Visual Flight Rules	
	(aa) with the surface in sight	D
	(bb) when the surface is not in sight	E
	(ii) flying by day under Instrument Flight Rules	
	(aa) with the surface in sight	E
	(bb) when the surface is not in sight outside controlled airspace	E with E(2) duplicated
	(cc) when the surface is not in sight within controlled airspace	E with both E(2) and E(4) duplicated and F
	(iii) flying by night;	
	(aa) with the surface in sight	C, E, G(3), (5) and (6)
	(bb) when the surface is not in sight outside controlled airspace	C, E with E(2) duplicated, G(3), (5) and (6)
	(cc) when the surface is not in sight within controlled airspace	C, E with both E(2) and E(4) duplicated, F, G(3), (5) and (6)
	(iv) flying at a height of 13,000 ft or more above mean sea level	L1 or L2
	(v) flying over water	
	(aa) beyond autorotational gliding distance from land suitable for an emergency landing	H
	(bb) on all flights on which in the event of any emergency occurring during the take-off or during the landing at the intended destination or any likely alternate destination it is reasonably possible that the helicopter or gyroplane would be forced to land onto water	H

Description of Aircraft	Circumstances of Flight	Scale of Equipment Required
(15) Helicopters and Gyroplanes (contd.)	(cc) at a distance of more than 10 minutes flying time at normal cruising speed away from land suitable for making an emergency landing	KK(1) or KK(2)
	(vi) flying over areas which have been designated by the State concerned as areas in which search and rescue would be especially difficult, and where	KK(2)
	(aa) in the event of an emergency landing, tropical conditions are likely to be met	U (except U(1))
	(bb) in the event of an emergency landing, polar conditions are likely to be met	V (except V(1))
	(b) flying for the purpose of public transport and	A, B(1), (2), (3), (4), (5), (6) and (7) and F(1) and F(4)
	(i) flying by day under Visual Flight Rules	
	(aa) with the surface in sight	D
	(bb) when the surface is not in sight	E
	(ii) flying by day under Instrument Flight Rules	
	(aa) with the surface in sight	E
	(bb) when the surface is not in sight	E with both E(2) and E(4) duplicated, F(2), (3) and (5)
	(iii) flying by night with the surface in sight	
	(aa) in circumstances where one pilot is required	C, E with E(2) duplicated and either E(4) duplicated or a radio altimeter, F(2), (3), (5) and G

Description of Aircraft	Circumstances of Flight	Scale of Equipment Required
(15) Helicopters and Gyroplanes (contd.)	(bb) in circumstances where two pilots are required	C, E, F(2), (3), and (5) and G for each pilot's station
	(iv) flying by night when the surface is not in sight	C, E with both E(2) and E(4) duplicated, F(2), (3), (5) and G
	(v) flying over water	
	(aa) in the case of a helicopter carrying out Performance Class 2 or 3 operations or a gyroplane classified in its certificate of airworthiness as being of performance group A2 or B when beyond auto-rotational gliding distance from land suitable for an emergency landing	E and H
	(bb) on all flights on which in the event of any emergency occurring during the take-off or during the landing at the intended destination or any likely alternate destination it is reasonably possible that the helicopter or gyroplane would be forced to land onto water	H
	(cc) in the case of a helicopter carrying out Performance Class 1 or 2 operations or a gyroplane classified in its certificate of airworthiness as being of performance group A2 when beyond 10 minutes flying time from land	E, H, K and T
	(dd) for more than a total of three minutes in any flight	EE

Description of Aircraft	Circumstances of Flight	Scale of Equipment Required
(15) Helicopters and Gyroplanes (contd.)	(ee) in the case of a helicopter carrying out Performance Class 1 or 2 operations or a gyroplane classified in its certificate of airworthiness as being of performance group A2 which is intended to fly beyond 10 minutes flying time from land or which actually flies beyond 10 minutes flying time from land, on a flight which is either in support of or in connection with the offshore exploitation or exploration of mineral resources (including gas) or is on a flight under and in accordance with the terms of a police air operator's certificate, when in either case the weather reports or forecasts available to the commander of the aircraft indicate that the sea temperature will be less than plus 10ºC during the flight or when any part of the flight is at night	I
	(vi) flying on Performance Class 1 or 2 operations over water beyond 10 minutes flying time from land and not required to comply with sub-paragraph (ix)	KK(2)
	(vii) flying on Performance Class 3 operations beyond auto-rotational or safe forced landing distance from land	KK(2)
	(viii) flying over land areas which have been designated by the State concerned as areas in which search and rescue would be especially difficult	KK(2)
	(ix) flying on Performance Class 1 or 2 operations over water in a hostile environment at a distance from land corresponding to more than ten minutes flying time at normal cruising speed in support of or in connection with the offshore exploitation or exploration of mineral resources (including gas)	KK(3)

Description of Aircraft	Circumstances of Flight	Scale of Equipment Required
(15) Helicopters and Gyroplanes (contd.)	(x) on all flights which involve manoeuvres on water	H, J and K
	(xi) flying at a height of 10,000ft or more above mean sea level	
	(aa) having a certificate of airworthiness first issued (whether in the United Kingdom or elsewhere) before 1st January 1989	L1 or L2
	(bb) having a certificate of airworthiness first issued (whether in the United Kingdom or elsewhere) on or after 1st January 1989	L2
	(xii) on flights when the weather reports or forecasts available at the aerodrome at the time of departure indicate that conditions favouring ice formation are likely to be met	M
	(xiii) on all flights on which the aircraft carries a flight crew of more than one person	N
	(xiv) on all flights for the purpose of the public transport of passengers	Y(1), (2) and (3)
	(xv) flying over substantially uninhabited land areas where, in the event of an emergency landing, tropical conditions are likely to be met	U
	(xvi) flying over substantially uninhabited land or other areas where, in the event of an emergency landing, polar conditions are likely to be met	V
	(xvii) with a maximum approved passenger seating configuration of more than nine and operating in a hostile environment	SS(8)

Description of Aircraft	Circumstances of Flight	Scale of Equipment Required
(16) Helicopters and Gyroplanes;		I
(a) having a maximum total weight authorised of more than 5700kg and which conform to a type for which a certificate of airworthiness was first applied for (whether in the United Kingdom or elsewhere) after 30th April 1972 but not including any helicopter or gyroplane which in the opinion of the CAA is identical in all matters affecting the provision of emergency evacuation facilities to a helicopter or gyroplane for which a certificate of airworthiness was first applied for before that date; or	flying by night for the purpose of the public transport of passengers	Z(1) and (2)
(b) with a maximum approved passenger seating configuration of more than 19; or	flying by night for the purpose of the public transport of passengers	Z(1)
(c) which are public transport helicopters or gyroplanes for which there is in force a certificate of airworthiness and public transport helicopters or gyroplanes for which application has been made and not withdrawn or refused for a certificate of airworthiness, and which fly under an EASA permit to fly, the A Conditions or under a certificate of airworthiness in the Special Category described in Part B of Schedule 2; and		
(i) which have a maximum total weight authorised of more than 2730kg but not more than 7000kg or with a maximum approved passenger seating configuration of more than 9 or both	flying on any flight	SS(1) or SS(3)
(ii) which have a maximum total weight authorised of more than 7000kg	flying on any flight	SS(2) or SS(3)

5 The scales of equipment indicated in the Table at paragraph 4 are as follows:

Scale A

(1) Spare fuses for all electrical circuits the fuses of which can be replaced in flight, consisting of 10 per cent of the number of each rating or three of each rating, whichever is the greater.

(2) Maps, charts, codes and other documents and navigational equipment necessary, in addition to any other equipment required under this Order, for the intended flight of the aircraft including any diversion which may reasonably be expected.

(3) First aid equipment of good quality, sufficient in quantity, having regard to the number of persons on board the aircraft, and including the following:

(a) roller bandages;

(b) triangular bandages;

(c) adhesive plaster;

(d) absorbent gauze or wound dressings;

(e) cotton wool or wound dressings;

(f) burn dressings;

(g) safety pins;

(h) haemostatic bandages or tourniquets;

(i) scissors;

(j) antiseptic;

(k) analgesic and stimulant drugs;

(l) splints, in the case of aeroplanes the maximum total weight authorised of which exceeds 5700kg; and

(m) a handbook on first aid.

(4) In the case of a flying machine used for the public transport of passengers in which, while the flying machine is at rest on the ground, the sill of any external door intended for the disembarkation of passengers, whether normally or in an emergency:

(a) is more than 1.82 metres from the ground when the undercarriage of the machine is in the normal position for taxiing; or

(b) would be more than 1.82 metres from the ground if the whole or any part of the undercarriage should collapse, break or fail to function,

apparatus readily available for use at each such door consisting of a device or devices which will enable passengers to reach the ground safely in an emergency while the flying machine is on the ground, and can be readily fixed in position for use.

(5) A hand fire extinguisher for each enclosed passenger and crew compartment, so installed that at least one extinguisher is conveniently located for use by a member of the flight crew.

Scale AA

(1) Subject to paragraph (2), an altitude alerting system capable of alerting the pilot on approaching a preselected altitude in either ascent or descent, by a sequence of visual and aural signals in sufficient time to establish level flight at that preselected altitude and when deviating above or below that preselected altitude, by a visual and an aural signal.

(2) If the system becomes unserviceable, the aircraft may fly or continue to fly, until it first lands at a place at which it is reasonably practicable for the system to be repaired or replaced.

Scale B

(1) If the maximum total weight authorised of the aircraft is 2730kg or less, for every pilot's seat and for any seat situated alongside a pilot's seat, either a safety belt with one diagonal shoulder strap or a safety harness, or with the permission of the CAA, a safety belt without a diagonal shoulder strap for which permission may be granted if the CAA is satisfied that it is not reasonably practicable to fit a safety belt with one diagonal shoulder strap or a safety harness.

(2) If the maximum total weight authorised of the aircraft exceeds 2730kg, either a safety harness for every pilot's seat and for any seat situated alongside a pilot's seat, or with the permission of the CAA, a safety belt with one diagonal shoulder strap which permission may be granted if the CAA is satisfied that it is not reasonably practicable to fit a safety harness.

(3) For every seat in use (not being a seat referred to in paragraphs (1), (2), (5) and (6)) a safety belt with or without one diagonal shoulder strap or a safety harness.

(4) In addition, and to be attached to or secured by the equipment required in paragraph (3) or (6), a child restraint device for every child under the age of two years on board.

(5) On all flights for the public transport of passengers by aircraft, for each seat for use by cabin crew who are required to be carried under this Order, a safety harness.

(6) On all flights in aeroplanes for which a certificate of airworthiness was first issued (whether in the United Kingdom or elsewhere) on or after 1st February 1989, the maximum total weight authorised of which is not more than 5700kg and with a maximum approved passenger seating configuration of 9 or less, (otherwise than for seats referred to under paragraph (1) or (2)), a safety belt with one diagonal shoulder strap or a safety harness for each seat intended for use by a passenger.

(7) If the commander cannot, from the commander's own seat, see all the passenger seats in the aircraft, a means of indicating to the passengers that seat belts should be fastened.

(8) Subject to paragraph (9), a safety harness for every seat in use.

(9) In the case of an aircraft carrying out aerobatic manoeuvres consisting only of erect spinning, the CAA may permit a safety belt with one diagonal shoulder strap to be fitted if it is satisfied that such restraint is sufficient for the carrying out of erect spinning in that aircraft and that it is not reasonably practicable to fit a safety harness in that aircraft.

Scale C

(1) Equipment for displaying the lights required by Section 8 of the Rules of the Air Regulations 2007[(a)].

(2) Electrical equipment, supplied from the main source of supply in the aircraft, to provide sufficient illumination to enable the flight crew properly to carry out their duties during flight.

(3) Unless the aircraft is equipped with radio, devices for making the visual signal specified in Rule 61 of the Rules of the Air Regulations 2007 as indicating a request for permission to land.

(a) S.I. 2007/734 to which there are amendments not relevant to this provision.

Scale D

(1) In the case of a helicopter or gyroplane, a slip indicator.

(2) In the case of any other flying machine either:

(a) a turn indicator and a slip indicator; or

(b) a gyroscopic bank and pitch indicator and a gyroscopic direction indicator.

(3) A sensitive pressure altimeter adjustable for any sea level barometric pressure which the weather report or forecasts available to the commander of the aircraft indicate is likely to be encountered during the intended flight.

Scale E

(1) In the case of:

(a) a helicopter or gyroplane, a slip indicator;

(b) any other flying machine, a slip indicator and either a turn indicator or, at the option of the operator, an additional gyroscopic bank and pitch indicator.

(2) A gyroscopic bank and pitch indicator.

(3) A gyroscopic direction indicator.

(4) A sensitive pressure altimeter adjustable for any sea level barometric pressure which the weather report or forecasts available to the commander of the aircraft indicate is likely to be encountered during the intended flight.

Scale EE

(1) Subject to paragraph (2), a radio altimeter with an audio voice warning operating below a preset height and a visual warning capable of operating at a height selectable by the pilot.

(2) A helicopter flying under and in accordance with the terms of a police air operator's certificate may instead be equipped with a radio altimeter with an audio warning and a visual warning each capable of operating at a height selectable by the pilot.

Scale F

(1) A timepiece indicating the time in hours, minutes and seconds.

(2) A means of indicating whether the power supply to the gyroscopic instrument is adequate.

(3) A rate of climb and descent indicator.

(4) A means of indicating in the flight crew compartment the outside air temperature calibrated in degrees celsius.

(5) If the maximum total weight authorised of the aircraft exceeds 5700kg, two air speed indicators.

Scale G

(1) In the case of an aircraft other than a helicopter or gyroplane, landing lights consisting of two single filament lamps, or one dual filament lamp with separately energised filaments.

(2) An electrical lighting system to provide illumination in every passenger compartment.

(3) Either:

(a) one electric torch for each member of the crew of the aircraft; or

(b) one electric torch:

(i) for each member of the flight crew of the aircraft; and

(ii) affixed adjacent to each floor level exit intended for the disembarkation of passengers whether normally or in an emergency, provided that such torches must:

(iia) be readily accessible for use by the crew of the aircraft at all times; and

(iib) number in total not less than the minimum number of members of the cabin crew required to be carried with a full passenger complement.

(4) In the case of an aircraft other than a helicopter or gyroplane which has a maximum total weight authorised exceeding 5700kg, means of observing the existence and build up of ice on the aircraft.

(5) In the case of a helicopter carrying out Performance Class 1 or 2 operations or a gyroplane for which there is in force a certificate of airworthiness designating the gyroplane as being of performance group A[(a)], either:

(a) two landing lights both of which are adjustable so as to illuminate the ground in front of and below the helicopter or gyroplane and one of which is adjustable so as to illuminate the ground on either side of the helicopter or gyroplane; or

(b) one landing light or, if the maximum total weight authorised of the helicopter or gyroplane exceeds 5700kg, one dual filament landing light with separately energised filaments, or two single filament lights, each of which is adjustable so as to illuminate the ground in front of and below the helicopter or gyroplane, and two parachute flares.

(6) In the case of a helicopter carrying out Performance Class 3 operations or a gyroplane for which there is in force a certificate of airworthiness designating the gyroplane as being of performance group B:

(a) one landing light and two parachute flares;

(b) if the maximum total weight authorised of the helicopter or gyroplane exceeds 5700kg, either one dual filament landing light with separately energised filaments or two single filament landing lights, and two parachute flares; or

(c) if the maximum total weight authorised of the helicopter or gyroplane is 5700kg or less and the flight is for a purpose other than public transport:

(i) two landing lights, one of which is adjustable in flight so as to illuminate the ground in front of, below and on either side of the helicopter; or

(ii) two landing lights in addition to the helicopter standard equipment, which must be adjusted so as to illuminate the ground in front of the helicopter.

Scale GG

A landing light.

Scale H

(1) Subject to paragraph (2), for each person on board, a lifejacket equipped with a whistle and survivor locator light.

(2) Lifejackets constructed and carried solely for use by children under three years of age need not be equipped with a whistle.

(a) A gyroplane is designated as performance group A or B according to its ability to continue a flight in the event of engine failure.

Scale I

A survival suit for each member of the crew.

Scale J

(1) Additional flotation equipment, capable of supporting one-fifth of the number of persons on board, and provided in a place of stowage accessible from outside the flying machine.

(2) Parachute distress rocket signals capable of making, from the surface of the water, the pyrotechnical signal of distress specified in Rule 61 of the Rules of the Air Regulations 2007 and complying with Part III of Schedule 15 to the Merchant Shipping (Life-Saving Appliances) Regulations 1980[(a)].

(3) A sea anchor and other equipment necessary to facilitate mooring, anchoring or manoeuvring the flying machine on water, appropriate to its size, weight and handling characteristics.

Scale K

(1) In the case of:

(a) a flying machine, other than a helicopter or gyroplane carrying 20 or more persons, liferafts sufficient to accommodate all persons on board;

(b) a helicopter or gyroplane carrying 20 or more persons, a minimum of two liferafts sufficient together to accommodate all persons on board.

(2) Each liferaft must contain the following equipment:

(a) means of maintaining buoyancy;

(b) a sea anchor;

(c) life-lines, and means of attaching one liferaft to another;

(d) paddles or other means of propulsion;

(e) means of protecting the occupants from the elements;

(f) a waterproof torch;

(g) marine type pyrotechnical distress signals;

(h) means of making sea water drinkable, unless the full quantity of fresh water is carried as specified in sub-paragraph (i);

(i) or each four or proportion of four persons the liferaft is designed to carry:

(i) 100 grammes of glucose toffee tablets; and

(ii) (aa) subject to sub-paragraph (bb), ½ litre of fresh water in durable containers or in any case in which it is not reasonably practicable to carry the quantity of water above specified, as large a quantity of fresh water as is reasonably practicable in the circumstances;

(bb) in no case must the quantity of water carried be less than is sufficient, when added to the amount of fresh water capable of being produced by means of the equipment specified in sub-paragraph (h) to provide ½ litre of water for each four or proportion of four persons the liferaft is designed to carry; and

(j) first aid equipment.

(3) Items (2)(f) to (j) inclusive must be contained in a pack.

(a) SI 1980/538.

(4) The number of survival beacon radio apparatus carried when the aircraft is carrying the number of liferafts specified in Column 1 of the following Table must be not less than the number specified in, or calculated in accordance with, Column 2.

Column 1	*Column 2*
Not more than 8 liferafts	2 survival beacon radio apparatus
For every additional 4 or proportion of 4 liferafts	1 additional survival beacon radio apparatus

Scale KK

(1) A survival emergency locator transmitter which complies with paragraph (4).

(2) An automatic emergency locator transmitter which complies with paragraph (4).

(3) An automatically deployable emergency locator transmitter which complies with paragraph (4).

(4) The transmitter must be capable of operating in accordance with the relevant provisions of Annex 10 to the Chicago Convention, Volume III (Second Edition July 2007)[(a)] and transmitting on 121.5 MHz and 406 MHz.

Scale L1 Part 1

(1) In every flying machine which is provided with means for maintaining a pressure greater than 700 hectopascals throughout the flight in the flight crew compartment and in the compartments in which the passengers are carried:

(a) in the event of a failure to maintain such pressure occurring in the circumstances specified in columns 1 and 2 of the Table set out in Part 2, a supply of oxygen sufficient for continuous use during the periods specified in column 3 of the Table, by the persons for whom oxygen is to be provided in accordance with column 4 of the Table; and

(b) in every case where the flying machine flies above flight level 350, a supply of oxygen in a portable container sufficient for the simultaneous first aid treatment of two passengers,

together with suitable and sufficient apparatus to enable such persons to use the oxygen.

(2) In any other flying machine:

(a) a supply of oxygen sufficient for continuous use by all the crew other than the flight crew and, if passengers are carried, by 10% of the number of passengers, for any period of more than 30 minutes during which the flying machine flies above flight level 100 but not above flight level 130; and the flight crew must be supplied with oxygen sufficient for continuous use for any period during which the flying machine flies above flight level 100; and

(b) a supply of oxygen sufficient for continuous use by all persons on board for the whole time during which the flying machine flies above flight level 130,

together with suitable and sufficient apparatus to enable such persons to use the oxygen.

(3) The quantity of oxygen required for the purpose of complying with paragraphs (1) and (2) of this Part is to be computed in accordance with the information and instructions specified in the operations manual relating to the aircraft under paragraph 1(h) of Part A of Schedule 8.

(a) Annex 10 is published by the International Civil Aviation Organisation. For availability see Explanatory Note.

Scale L1 Part 2

Column 1	*Column 2*	*Column 3*	*Column 4*
Vertical displacement of the flying machine in relation to flight levels	*Capability of flying machine to descend (where relevant)*	*Period of supply of oxygen*	*Persons for whom oxygen is to be provided*
Above flight level 100	—	30 minutes or the period specified at A below whichever is the greater	In addition to any passengers for whom oxygen is provided as specified below, all the crew
Above flight level 100 but not above flight level 300	Flying machine is either flying at or below flight level 150 or is capable of descending and continuing to destination as specified at X below	30 minutes or the period specified at A below whichever is the greater	10% of number of passengers
Above flight level 100 but not above flight level 300	Flying machine is flying above flight level 150 and is not capable of descending and continuing to destination specified at X below	10 minutes or the period specified at B below whichever is the greater; and	All passengers
		30 minutes or the period specified at C below whichever is the greater	10% of number of passengers
Above flight level 300 but not above flight level 350	Flying machine is capable of descending and continuing to destination as specified at Y below	30 minutes or the period specified at A below whichever is the greater	15% of number of passengers
Above flight level 300 but not above flight level 350	Flying machine is not capable of descending and continuing to destination as specified at Y below	10 minutes or the period specified at B below whichever is the greater; and	All passengers
		30 minutes or the period specified at C below whichever is the greater	15% of passengers
Above flight level 350	—	10 minutes or the period specified at B below whichever is the greater; and	All passengers
		30 minutes or the period specified at C below whichever is the greater	15% of number of passengers

A. The whole period during which, after a failure to maintain a pressure greater than 700 hectopascals in the control compartment and in the compartments in which passengers are carried has occurred, the flying machine flies above flight level 100.

B. The whole period during which, after a failure to maintain such pressure has occurred, the flying machine flies above flight level 150.

C. The whole period during which, after a failure to maintain such pressure has occurred, the flying machine flies above flight level 100, but not above flight level 150.

X. The flying machine is capable, at the time when a failure to maintain such pressure occurs, of descending in accordance with the emergency descent procedure specified in the flight manual and without flying below the minimum altitudes for safe flight specified in the operations manual, to flight level 150 within six minutes, and of continuing at or below that flight level to its place of intended destination or any other place at which a safe landing can be made.

Y. The flying machine is capable, at the time when a failure to maintain such pressure occurs, of descending in accordance with the emergency descent procedure specified in the flight manual and without flying below the minimum altitudes for safe flight specified in the operations manual, to flight level 150 within four minutes, and of continuing at or below that flight level to its place of intended destination or any other place at which a safe landing can be made.

Scale L2

(1) A supply of oxygen and the associated equipment to meet the requirements set out in Part 1 of this Scale in the case of unpressurised aircraft and Part 2 of this Scale in the case of pressurised aircraft.

(2) The duration for the purposes of this Scale is whichever is the greater of:

(a) that calculated in accordance with the operations manual before the commencement of the flight, being the period or periods which it is reasonably anticipated that the aircraft will be flown in the circumstances of the intended flight at a height where the said requirements apply, and in calculating the duration, account must be taken of:

(i) in the case of pressurised aircraft, the possibility of depressurisation when flying above flight level 100;

(ii) the possibility of failure of one or more of the aircraft engines;

(iii) restrictions due to required minimum safe altitude;

(iv) fuel requirement; and

(v) the performance of the aircraft; or

(b) the period or periods during which the aircraft is actually flown in the circumstances specified in those Parts.

Part 1 Unpressurised aircraft

(1) When flying at or below flight level 100, nil.

(2) When flying above flight level 100 but not above flight level 120:

Supply for	*Duration*
(a) Members of the flight crew	Any period during which the aircraft flies above flight level 100
(b) Members of the cabin crew and 10% of passengers	For any continuous period of more than 30 minutes during which the aircraft flies above flight level 100 but not above flight level 120, the duration is the period by which 30 minutes is exceeded

(3) When flying above flight level 120:

Supply for	*Duration*
(a) Members of the flight crew	Any period during which the aircraft flies above flight level 120
(b) Members of the cabin crew and all passengers	Any period during which the aircraft flies above flight level 120

Part 2 Pressurised aircraft

(1) When flying at or below flight level 100, nil.

(2) When flying above flight level 100 but not above flight level 250:

Supply for	*Duration*
(a) Members of the flight crew	30 minutes or whenever the cabin pressure altitude exceeds 10,000 ft, whichever is the greater
(b) Members of the cabin crew and 10% of passengers	(i) When the aircraft is capable of descending and continuing to its destination as specified at A below, 30 minutes or whenever the cabin pressure altitude exceeds 10,000 ft, whichever is the greater
	(ii) When the aircraft is not so capable, whenever the cabin pressure altitude is greater than 10,000 ft but is not more than 12,000 ft
(c) Members of the cabin crew and all passengers	(i) When the aircraft is capable of descending and continuing to its destination as specified at A below, no requirement other than that at (2)(b)(i) of this Part of this Scale
	(ii) When the aircraft is not so capable and the cabin pressure altitude exceeds 12,000 ft, the duration is the period when the cabin pressure altitude exceeds 12,000 ft or 10 minutes, whichever is the greater

(3) When flying above flight level 250:

Supply for	*Duration*
(a) Members of the flight crew	2 hours or whenever the cabin pressure altitude exceeds 10,000 ft, whichever is the greater
(b) Members of the cabin crew	Whenever the cabin pressure altitude exceeds 10,000 ft, and a portable supply for 15 minutes
(c) 10% of passengers	Whenever the cabin pressure altitude exceeds 10,000 ft but is not more than 12,000 ft
(d) 30% of passengers	Whenever the cabin pressure altitude exceeds 12,000 ft but is not more than 15,000 ft
(e) All passengers	If the cabin pressure altitude exceeds 15,000 ft, the duration is the period when the cabin pressure altitude exceeds 15,000 ft or 10 minutes, whichever is the greater
(f) 2% of passengers or two passengers, whichever is the greater, being a supply of first aid oxygen which must be available for simultaneous first aid treatment of 2% or two passengers wherever they are seated in the aircraft	Whenever, after decompression, the cabin pressure altitude exceeds 8000 ft

A. The flying machine is capable, at the time when a failure to maintain cabin pressurisation occurs, of descending in accordance with the emergency descent procedure specified in the relevant flight manual and without flying below the minimum altitudes for safe flight specified in the operations manual relating to the aircraft, to flight level 120 within five minutes and of continuing at or below that flight level to its place of intended destination or any other place at which a safe landing can be made.

Scale M

Equipment to prevent the impairment through ice formation of the functioning of the controls, means of propulsion, lifting surfaces, windows or equipment of the aircraft so as to endanger the safety of the aircraft.

Scale N

An intercommunication system for use by all members of the flight crew and including microphones, not of a hand-held type, for use by the pilot and flight engineer (if any).

Scale O

(1) Subject to paragraphs (2) and (3), a radar set capable of giving warning to the pilot in command of the aircraft and to the co-pilot of the presence of cumulo-nimbus clouds and other potentially hazardous weather conditions.

(2) A flight may commence if the set is unserviceable or continue if the set becomes unserviceable in flight so as to give the warning only to one pilot, if the aircraft is flying only to the place at which it first becomes reasonably practicable for the set to be repaired.

(3) A flight may commence if the set is unserviceable or continue if the set becomes unserviceable in flight if:

(a) the weather report or forecasts available to the commander of the aircraft indicate that cumulo-nimbus clouds or other potentially hazardous weather conditions, which can be detected by the set when in working order, are unlikely to be encountered on the intended route or any planned diversion from the route; or

(b) the commander is satisfied that any such weather conditions will be encountered in daylight and can be seen and avoided; and

(c) the aircraft is operated throughout the flight in accordance with any relevant instructions given in the operations manual.

Scale P

(1) Subject to paragraphs (2) and (5), a flight data recorder which is capable of recording, by reference to a time-scale, the following data:

(a) indicated airspeed;

(b) indicated altitude;

(c) vertical acceleration;

(d) magnetic heading;

(e) pitch attitude, if the equipment provided in the aeroplane is of such a nature as to enable this item to be recorded;

(f) engine power, if the equipment provided in the aeroplane is of such a nature as to enable this item to be recorded;

(g) flap position; and

(h) roll attitude, if the equipment provided in the aeroplane is of such a nature as to enable this item to be recorded.

(2) Subject to paragraph (5), any aeroplane having a maximum total weight authorised of not more than 11,400kg may be provided with:

(a) a flight data recorder capable of recording the data specified in paragraph (1); or

(b) a four channel cockpit voice recorder.

(3) Subject to paragraph (5), in addition, on all flights by turbine-powered aeroplanes having a maximum total weight authorised of more than 11,400kg, a four channel cockpit voice recorder.

(4) The flight data recorder and cockpit voice recorder referred to above must be so constructed that the record would be likely to be preserved in the event of an accident to the aeroplane.

(5) An aeroplane is not required to carry the equipment specified in paragraphs (1), (2) and (3) if, before take off, the equipment is found to be unserviceable and the aircraft flies in accordance with arrangements approved by the CAA.

Scale Q

If the maximum total weight authorised of the aeroplane exceeds 5700kg and it was first registered, whether in the United Kingdom or elsewhere, on or after 1st June 1965, a door between the flight crew compartment and any adjacent compartment to which passengers have access, which door must be fitted with a lock or bolt capable of being worked from the flight crew compartment.

Scale R

(1) For aeroplanes having a maximum total weight authorised of more than 5700kg:

(a) equipment sufficient to protect the eyes, nose and mouth of all members of the flight crew required to be carried by Part 5 for a period of not less than 15 minutes; and

(b) if under Part 5 the minimum flight crew required to be carried is more than one and a member of the cabin crew is not required to be carried, portable equipment sufficient to protect the eyes, nose and mouth of one member of the flight crew for a period of not less than 15 minutes.

(2) For aeroplanes having a maximum total weight authorised of not more than 5700kg:

(a) either the equipment specified in paragraph (1); or

(b) in the case of such aeroplanes which are restricted by virtue of the operator's operations manual to flight at or below flight level 250 and are capable of descending as specified at paragraph (5), such equipment sufficient to protect the eyes only.

(3) For:

(a) aeroplanes having a maximum total weight authorised of more than 5700kg, portable equipment to protect the eyes, nose and mouth of all members of the cabin crew required to be carried by Part 5 for a period of not less than 15 minutes;

(b) aeroplanes having a maximum total weight authorised of not more than 5700kg, subject to paragraph (4), the equipment specified in sub-paragraph (3)(a).

(4) Sub-paragraph (3)(b) does not apply to such aeroplanes which are restricted by virtue of the operator's operations manual to flight at or below flight level 250 and are capable of descending as specified at paragraph (5).

(5) The aeroplane is capable of descending in accordance with the emergency descent procedure specified in the relevant flight manual and without flying below the minimum altitudes for safe flight specified in the operations manual relating to the aeroplane, to flight level 100 within four minutes and of continuing at or below that flight level to its place of intended destination or any other place at which a safe landing can be made.

Scale S

(1) Subject to paragraph (8), either a four channel cockpit voice recorder or a flight data recorder which complies with paragraph (7) and capable of recording by reference to a time scale the data required to determine the following matters accurately in respect of the aeroplane:

(a) the flight path;

(b) attitude; and

(c) the basic lift, thrust and drag forces acting on it.

(2) Subject to paragraph (8), a four channel cockpit voice recorder and a flight data recorder which comply with paragraph (7) and capable of recording by reference to a time scale the data required to determine the following matters accurately in respect of the aeroplane:

(a) the information specified in paragraph (1); and

(b) use of VHF transmitters.

(3) Subject to paragraph (8), a four channel cockpit voice recorder and a flight data recorder which comply with paragraph (7) and capable of recording by reference to a time scale

the data required to determine the following matters accurately in respect of the aeroplane:

(a) the flight path;

(b) attitude;

(c) the basic lift, thrust and drag forces acting on it;

(d) the selection of high lift devices (if any) and airbrakes (if any);

(e) the position of primary flying control and pitch trim surfaces;

(f) outside air temperature;

(g) instrument landing deviations;

(h) use of automatic flight control systems;

(i) use of VHF transmitters;

(j) radio altitude (if any); and

(k) the level or availability of essential AC electricity supply and cockpit warnings relating to engine fire and engine shut-down, cabin pressurisation, presence of smoke and hydraulic/pneumatic power supply.

(4) Subject to paragraph (8), either a cockpit voice recorder and a flight data recorder or a combined cockpit voice recorder/flight data recorder which comply with paragraph (7) and capable in either case of recording by reference to a time scale the data required to determine the following matters accurately in respect of the aeroplane:

(a) the flight path;

(b) speed;

(c) attitude;

(d) engine power;

(e) outside air temperature;

(f) configuration of lift and drag devices;

(g) use of VHF transmitters; and

(h) use of automatic flight control systems.

(5) Subject to paragraph (8), a cockpit voice recorder and a flight data recorder which comply with paragraph (7) and capable of recording by reference to a time scale the data required to determine the following matters accurately in respect of the aeroplane:

(a) the flight path;

(b) speed;

(c) attitude;

(d) engine power;

(e) outside air temperature;

(f) configuration of lift and drag devices;

(g) use of VHF transmitters; and

(h) use of automatic flight control systems.

(6) Subject to paragraph (8), a cockpit voice recorder and a flight data recorder which comply with paragraph (7) and capable of recording by reference to a time scale the data required to determine the following matters accurately in respect of the aeroplane:

(a) the flight path;

(b) speed;

(c) attitude;

(d) engine power;

(e) outside air temperature;

(f) instrument landing system deviations;

(g) marker beacon passage;

(h) radio altitude;

(i) configuration of the landing gear and lift and drag devices;

(j) position of primary flying controls;

(k) pitch trim position;

(l) use of automatic flight control systems;

(m) use of VHF transmitters;

(n) ground speed/drift angle or latitude/longitude if the navigational equipment provided in the aeroplane is of such a nature as to enable this information to be recorded with reasonable practicability;

(o) cockpit warnings relating to ground proximity; and

(p) the master warning system.

(7) Any cockpit voice recorder, flight data recorder or combined cockpit voice recorder/flight data recorder required to be carried by paragraphs (1) to (6) must be so constructed that the record would be likely to be preserved in the event of an accident.

(8) An aircraft is not required to carry the equipment specified in paragraphs (1) to (6) if, before take-off, the equipment is found to be unserviceable and the aircraft flies in accordance with arrangements approved by the CAA.

Scale SS

(1) A four channel cockpit voice recorder capable of recording and retaining the data recorded during at least the last 30 minutes of its operation and a flight data recorder capable of recording and retaining the data recorded during at least the last eight hours of its operation being the data required to determine by reference to a time scale the following matters accurately in respect of the helicopter or gyroplane:

(a) flight path;

(b) speed;

(c) attitude;

(d) engine power;

(e) main rotor speed;

(f) outside air temperature;

(g) position of pilot's primary flight controls;

(h) use of VHF transmitters;

(i) use of automatic flight controls (if any);

(j) use of stability augmentation system (if any);

(k) cockpit warnings relating to the master warning system; and

(l) selection of hydraulic system and cockpit warnings of failure of essential hydraulic systems.

(2) (a) A four channel cockpit voice recorder capable of recording and retaining the data recorded during at least the last 30 minutes of its operation; and

(m) a flight data recorder capable of recording and retaining the data recorded during at least the last 8 hours of its operation, being the data required to accurately determine by reference to a time scale the information specified in paragraph (1) together with the following matters in respect of the helicopter or gyroplane:

(i) landing gear configuration;

(ii) indicated sling load force if an indicator is provided in the helicopter or gyroplane of such a nature as to enable this information to be recorded with reasonable practicability;

(iii) radio altitude;

(iv) instrument landing system deviations;

(v) marker beacon passage;

(vi) ground speed/drift angle or latitude/longitude if the navigational equipment provided in the helicopter or gyroplane is of such a nature as to enable this information to be recorded with reasonable practicability; and

(vii) main gear box oil temperature and pressure.

(3 Subject to paragraphs (4) and (7), a combined cockpit voice recorder/flight data recorder which meets the following requirements:

(a) in the case of a helicopter or gyroplane which is otherwise required to carry a flight data recorder specified at paragraph (1) the flight data recorder must be capable of recording the data specified in paragraph (1) and retaining it for the duration specified in paragraph (1);

(b) in the case of a helicopter or gyroplane which is otherwise required to carry a flight data recorder specified at paragraph (2) the flight data recorder must be capable of recording the data specified in paragraph (2) and retaining it for the duration specified in paragraph (2); and

(c) the cockpit voice recorder must be capable of recording and retaining at least the last hour of cockpit voice recording information on not less than three separate channels.

(4) (a) Subject to sub-paragraph (b), in any case when a combined cockpit voice recorder/ flight data recorder specified at paragraph (3)(a) is required to be carried by or under this Order, the flight data recorder must be capable of retaining:

(i) as protected data the data recorded during at least the last five hours of its operation or the maximum duration of the flight, whichever is the greater; and

(ii) additional data as unprotected data for a period which together with the period for which protected data is required to be retained amounts to a total of eight hours.

(b) The flight data recorder need not be capable of retaining the additional data specified in sub-paragraph (b) if:

(i) other additional data is retained which relates to the period immediately preceding the period to which the required protected data relates or for such other period or periods as the CAA may permit under article 155(4)(b); and

(ii) the other additional data is retained in accordance with arrangements approved by the CAA.

(5) With the exception of flight data which it is expressly stated above may be unprotected, the cockpit voice recorder, flight data recorder or combined cockpit voice recorder/ flight data recorder required to be carried on the helicopter or gyroplane must be so constructed and installed that the data recorded (in this Scale referred to as 'protected data') would be likely to be preserved in the event of an accident.

(6) Each cockpit voice recorder, flight data recorder or combined cockpit voice recorder/ flight data recorder required to be carried on the helicopter or gyroplane must have attached an automatically activated underwater sonar location device or an emergency locator radio transmitter.

(7) A helicopter or gyroplane is not required to carry the equipment specified in paragraphs (1) to (3) if, before take-off, the equipment is found to be unserviceable and the aircraft flies in accordance with arrangements approved by the CAA.

(8) A vibration health monitoring system capable of monitoring the vibration of critical helicopter rotor and rotor drive system components.

Scale T

An underwater sonar location device except for those helicopters or gyroplanes which are required to carry equipment in accordance with Scale SS.

Scale U

(1) One survival beacon radio apparatus.

(2) Marine type pyrotechnical distress signals.

(3) For each four or proportion of four persons on board, 100 grammes of glucose toffee tablets.

(4) For each four or proportion of four persons on board, ½ litre of fresh water in durable containers.

(5) First aid equipment.

Scale V

(1) One survival beacon radio apparatus.

(2) Marine type pyrotechnical distress signals.

(3) For each four or proportion of four persons on board, 100 grammes of glucose toffee tablets.

(4) For each four or proportion of four persons on board, ½ litre of fresh water in durable containers.

(5) First aid equipment.

(6) For every 75 or proportion of 75 persons on board, 1 stove suitable for use with aircraft fuel.

(7) One cooking utensil, in which snow or ice can be melted.

(8) Two snow shovels.

(9) Two ice saws.

(10) Single or multiple sleeping-bags, sufficient for the use of one-third of all persons on board.

(11) One arctic suit for each member of the crew of the aircraft.

Scale W

(1) Subject to paragraph (2), cosmic radiation detection equipment calibrated in millirems per hour and capable of indicating the action and alert levels of radiation dose rate.

(2) An aircraft is not required to carry the equipment if:

(a) before take-off the equipment is found to be unserviceable and it is not reasonably practicable to repair or replace it at the aerodrome of departure; and

(b) the radiation forecast available to the commander of the aircraft indicates that hazardous radiation conditions are unlikely to be encountered by the aircraft on its intended route or any planned diversion from that route.

Scale X

(1) Subject to paragraph (3), a Terrain Awareness and Warning System known as Class A, being equipment capable of giving warning to the pilot of the potentially hazardous proximity of ground or water, including excessive closure rate to terrain, flight into terrain when not in landing configuration, excessive downward deviation from an instrument landing system glideslope, a predictive terrain hazard warning function and a visual display.

(2) Subject to paragraph (3), a Terrain Awareness and Warning System known as Class B, being equipment capable of giving warning to the pilot of the potentially hazardous proximity of ground or water, including a predictive terrain hazard warning function.

(3) If the equipment becomes unserviceable, the aircraft may fly or continue to fly until it first lands at a place at which it is reasonably practicable for the equipment to be repaired or replaced.

Scale Y

(1) If the aircraft may carry more than 19 and less than 100 passengers in accordance with its certificate of airworthiness, one portable battery-powered megaphone capable of conveying instructions to all persons in the passenger compartment and readily available for use by a member of the crew.

(2) If the aircraft may carry more than 99 and less than 200 passengers in accordance with its certificate of airworthiness, two portable battery-powered megaphones together capable of conveying instructions to all persons in the passenger compartment and each readily available for use by a member of the crew.

(3) If the aircraft may carry more than 199 passengers in accordance with its certificate of airworthiness, three portable battery-powered megaphones together capable of conveying instructions to all persons in the passenger compartment and each readily available for use by a member of the crew.

(4) If the aircraft may carry more than 19 passengers in accordance with its certificate of airworthiness:

(a) a public address system; and

(b) an interphone system of communication between members of the flight crew and the cabin crew.

Scale Z

(1) An emergency lighting system to provide illumination in the passenger compartment sufficient to facilitate the evacuation of the aircraft notwithstanding the failure of the lighting systems specified in paragraph (2) of Scale G.

(2) In emergency lighting system to provide illumination outside the aircraft sufficient to facilitate the evacuation of the aircraft.

(3) Subject to paragraph (4), an emergency floor path lighting system in the passenger compartment sufficient to facilitate the evacuation of the aircraft notwithstanding the failure of the lighting systems specified in paragraph (2) of Scale G.

(4) If the equipment specified in paragraph (3) becomes unserviceable the aircraft may fly or continue to fly in accordance with arrangements approved by the CAA.

SCHEDULE 5 **Articles 28(7) and 39(2)**

RADIO COMMUNICATION AND RADIO NAVIGATION EQUIPMENT TO BE CARRIED IN AIRCRAFT

1 Subject to paragraph 2, every aircraft which must carry equipment specified in this Schedule must be provided, when flying in the circumstances specified in the first column of the Table in paragraph 3 of this Schedule, with the scales of equipment respectively indicated in the second column of that Table.

2 (1) In the case of sub-paragraphs (1), (2), (3), (4), (5), (6), (7), (9)(d) and (10) of paragraph 3, the specified equipment need not be carried if the appropriate air traffic control unit permits flight to commence without that equipment and the aircraft complies with any instructions which the air traffic control unit may give in the particular case.

(2) An aircraft which is not a commercial air transport aeroplane or a public transport aircraft and which is flying in Class D or Class E airspace need not carry distance measuring equipment in accordance with paragraph (b) of Scale F when flying in the circumstances specified in sub-paragraph (1)(a) of paragraph 3.

(3) If an aircraft is flying in a combination of circumstances specified in the first column of the Table in paragraph 3 the scales of equipment are not on that account required to be duplicated.

3 Table

Aircraft and Circumstances of Flight	Scale of Equipment Required								
	A	B	C	D	E	F	G	H	J
(1) All aircraft (other than gliders and SLMGs) within the United Kingdom:									
(a) flying under Instrument Flight Rules within controlled airspace	A				E2	F			
(b) flying within controlled airspace	A								
(c) making an approach to landing at an aerodrome notified for the purpose of this sub-paragraph							G		
(d) flying within controlled airspace of Class A, B or C					E2				
(2) All aircraft within the United Kingdom:									
(a) flying at or above flight level 195	A								
(b) flying within airspace notified for the purpose of this sub-paragraph	A								
(3) All aircraft (other than gliders, SLMGs and balloons) within the United Kingdom flying for the purpose of public transport					E2				
(4) Before 6th April 2012, all gliders and SLMGs flying within the United Kingdom at or above flight level 195 except when flying within airspace notified as a Temporary Reserved Area-Gliding					E2				
(5) On and after 6th April 2012, all gliders and SLMGs within the United Kingdom:									
(a) flying at or above flight level 100 except when flying within airspace notified for the purposes of this sub-paragraph					E2				

Aircraft and Circumstances of Flight	Scale of Equipment Required								
	A	B	C	D	E	F	G	H	J
(b) flying under Instrument Flight Rules within controlled airspace					E2				
(c) flying within controlled airspace of Class A, B or C except when flying within airspace notified as a Temporary Reserved Area (Gliding)					E2				
(d) flying within airspace notified for the purposes of this sub-paragraph					E2				
(6) All aircraft (other than gliders and SLMGs) within the United Kingdom:									
(a) flying at or above flight level 245					E2	F			
(b) flying within airspace notified for the purpose of this sub-paragraph					E2				
(c) flying at or above flight level 100					E2				
(7) When flying under Instrument Flight Rules within airspace notified for the purposes of this paragraph:									
(a) all aeroplanes having a maximum take-off weight authorised of not more than 5700kg and a maximum cruising true airspeed capability of not more than 250 knots					E2				
(b) all rotorcraft					E2				
(c) all aeroplanes having either a maximum take-off weight authorised of more than 5700kg or a maximum cruising true airspeed capability of more than 250 knots					E3				
(8) All aircraft required to carry Scale E2 or E3					EE				
(9) All aircraft (other than gliders and SLMGs) registered in the United Kingdom, wherever they may be:									
(a) flying for the purpose of public transport under Instrument Flight Rules:									
(i) while making an approach to landing	A		C	D				H	
(ii) on all other occasions	A		C					H	
(b) multi-engined aircraft when flying for the purpose of public transport under Visual Flight Rules	A							H	
(c) single-engined aircraft when flying for the purpose of public transport under Visual Flight Rules:									
(i) over a route on which navigation is effected solely by visual reference to landmarks	A								
(ii) on all other occasions	A	B							
(d) flying under Instrument Flight Rules and not required to comply with paragraph (9)(a)	A								

Aircraft and Circumstances of Flight	Scale of Equipment Required								
	A	B	C	D	E	F	G	H	J
(10) All aircraft (other than gliders, SLMGs and balloons) registered in the United Kingdom, wherever they may be when flying for the purpose of public transport					E2				
(11) All aeroplanes registered in the United Kingdom, wherever they may be, and all aeroplanes wherever registered when flying in the United Kingdom, powered by one or more turbine jets or turbine propeller engines and either having a maximum take-off weight of more than 15,000kg or with a maximum approved passenger seating configuration of more than 30									J
(12) All aeroplanes powered by one or more turbine jets or turbine propeller engines and either having a maximum take-off weight of more than 5700kg or a maximum approved passenger seating configuration of more than 19; and which are:									
(a) registered in the United Kingdom and flying for the purpose of public transport; or									J
(b) registered in the United Kingdom and flying within the airspace of the member states of the European Civil Aviation Conference; or									J
(c) flying in the United Kingdom									J

4 The scales of radio communication and radio navigation equipment indicated in the Table at paragraph 3 are as follows:

Scale A

Radio communication equipment capable of maintaining direct two-way communication with the appropriate air traffic control units on the intended route using the frequencies notified or otherwise designated by the competent authority for that purpose.

Scale B

Radio navigation equipment capable of enabling the aircraft to be navigated on the intended route including such equipment as may be prescribed.

Scale C

Radio communication equipment capable of receiving from the appropriate aeronautical radio stations meteorological broadcasts relevant to the intended flight.

Scale D

Radio navigation equipment capable of receiving signals from one or more aeronautical radio stations on the surface to enable the aircraft to be guided to a point from which a visual landing can be made at the aerodrome at which the aircraft is to land.

Scale E2 [1]

Secondary surveillance radar equipment which includes a pressure altitude reporting transponder capable of operating in Mode A and Mode C and has the capability and

1 Scale E1 was formerly defined as secondary surveillance radar equipment which includes a pressure altitude reporting transponder capable of operating in Mode A and Mode C and capable of being operated in accordance with such

functionality prescribed for Mode S Elementary Surveillance and is capable of being operated in accordance with such instructions as may be given to the aircraft by the air traffic control unit.

Scale E3

Secondary surveillance radar equipment which includes a pressure altitude reporting transponder capable of operating in Mode A and Mode C and has the capability and functionality prescribed for Mode S Enhanced Surveillance and is capable of being operated in accordance with such instructions as may be given to the aircraft by the air traffic control unit.

Scale EE

The aircraft must, in the circumstances specified in paragraph 2.1.5.3 of Volume IV (Fourth Edition July 2007) of Annex 10 to the Chicago Convention, comply with the requirements for antenna diversity set out in that paragraph.

Scale F

Radio communication and radio navigation equipment capable of enabling the aircraft to be navigated along the intended route including:

(a) automatic direction finding equipment;

(b) distance measuring equipment; and

(c) VHF omni-range equipment.

Scale G

Radio navigation equipment capable of enabling the aircraft to make an approach to landing using the Instrument Landing System.

Scale H

(1) Subject to paragraphs (2) and (3), radio navigation equipment capable of enabling the aircraft to be navigated on the intended route including:

  (a) automatic direction finding equipment;

  (b) distance measuring equipment;

  (c) duplicated VHF omni-range equipment; and

  (d) a 75 MHz marker beacon receiver.

(2) An aircraft may fly notwithstanding that it does not carry the equipment specified in this Scale if it carries alternative radio navigation equipment or navigational equipment approved in accordance with article 37(9).

(3) Where only one item of equipment specified in this Scale is unserviceable when the aircraft is about to begin a flight, the aircraft may nevertheless take off on that flight if:

  (a) it is not reasonably practicable for the repair or replacement of that item to be carried out before the beginning of the flight;

  (b) the aircraft has not made more than one flight since the item was last serviceable; and

  (c) the commander of the aircraft is satisfied that the flight can be made safely and in accordance with any relevant requirements of the appropriate air traffic control unit, taking into account the latest information available as to the route and aerodrome to be used (including any planned diversion) and the weather conditions likely to be encountered.

instructions as may be given to the aircraft by the air traffic control unit. There is no longer any requirement to carry Scale E1 but some aircraft may continue to carry it under a transitional exemption issued by the CAA.

Scale J

An airborne collision avoidance system.

5 In this Schedule:

(a) 'Airborne collision avoidance system' means an aeroplane system which:

(i) conforms to requirements prescribed for the purpose;

(ii) is based on secondary surveillance radar transponder signals;

(iii) operates independently of ground based equipment; and

(iv) is designed to provide advice and appropriate avoidance manoeuvres to the pilot in relation to other aeroplanes which are equipped with secondary surveillance radar and are in undue proximity;

(b) 'Automatic direction finding equipment' means radio navigation equipment which automatically indicates the bearing of any radio station transmitting the signals received by such equipment;

(c) 'Distance measuring equipment' means radio equipment capable of providing a continuous indication of the aircraft's distance from the appropriate aeronautical radio stations;

(d) 'Mode A' means replying to an interrogation from secondary surveillance radar units on the surface to elicit transponder replies for identity and surveillance with identity provided in the form of a four digit identity code;

(e) 'Mode C' means replying to an interrogation from secondary surveillance radar units on the surface to elicit transponder replies for automatic pressure-altitude transmission and surveillance;

(f) 'Secondary surveillance radar equipment' means such type of radio equipment as may be notified as being capable of:

(i) replying to an interrogation from secondary surveillance radar units on the surface; and

(ii) being operated in accordance with such instructions as may be given to the aircraft by the appropriate air traffic control unit;

(g) 'VHF omni-range equipment' means radio navigation equipment capable of giving visual indications of bearings of the aircraft by means of signals received from very high frequency omni-directional radio ranges.

INTENTIONALLY LEFT BLANK

SCHEDULE 6 **Article 34**

AIRCRAFT, ENGINE AND PROPELLER LOG BOOKS

Aircraft log book

1 The following entries must be included in the aircraft log book:

(a) the name of the constructor, the type of the aircraft, the number assigned to it by the constructor and the date of the construction of the aircraft;

(b) the nationality and registration marks of the aircraft;

(c) the name and address of the operator of the aircraft;

(d) the date of each flight and the duration of the period between take-off and landing, or, if more than one flight was made on that day, the number of flights and the total duration of the periods between take-offs and landings on that day;

(e) subject to paragraph 2, detailed information about all maintenance work carried out on the aircraft or its equipment;

(f) subject to paragraph 2, detailed information about any defects occurring in the aircraft or in any equipment required to be carried by or under this Order, and of the action taken to rectify such defects including a reference to the relevant entries in the technical log or the approved record required by article 27(2) and (3); and

(g) subject to paragraph 2, detailed information about any overhauls, repairs, replacements and modifications relating to the aircraft or any such equipment as aforesaid.

2 Entries are not required to be made under paragraphs 1(e), (f) and (g) for any engine or variable pitch propeller.

Engine log book

3 The following entries must be included in the engine log book:

(a) the name of the constructor, the type of engine, the number assigned to it by the constructor and the date of the construction of the engine;

(b) the nationality and registration marks of each aircraft in which the engine is fitted;

(c) the name and address of the operator of each such aircraft;

(d) either:

(i) the date of each flight and the duration of the period between take-off and landing or, if more than one flight was made on that day, the number of flights and the total duration of the periods between take-offs and landings on that day; or

(ii) the aggregate duration of periods between take-off and landing for all flights made by that aircraft since the immediately preceding occasion that any maintenance, overhaul, repair, replacement, modification or inspection was undertaken on the engine;

(e) detailed information about all maintenance work done on the engine;

(f) detailed information about any defects occurring in the engine, and of the rectification of such defects, including a reference to the relevant entries in the technical log or the approved record required by article 27(2) and (3); and

(g) detailed information about all overhauls, repairs, replacements and modifications relating to the engine or any of its accessories.

Variable pitch propeller log book

4 The following entries must be included in the variable pitch propeller log book:

(a) the name of the constructor, the type of propeller, the number assigned to it by the constructor and the date of the construction of the propeller;

(b) the nationality and registration marks of each aircraft, and the type and number of each engine, to which the propeller is fitted;

(c) the name and address of the operator of each such aircraft;

(d) either:

(i) the date of each flight and the duration of the period between take-off and landing or, if more than one flight was made on that day, the number of flights and the total duration of the periods between take-offs and landings on that day; or

(ii) the aggregate duration of periods between take-off and landing for all flights made by that aircraft since the immediately preceding occasion that any maintenance, overhaul, repair, replacement, modification or inspection was undertaken on the propeller;

(e) detailed information about all maintenance work done on the propeller;

(f) detailed information about any defects occurring in the propeller, and of the rectification of such defects, including a reference to the relevant entries in the technical log or the approved record required by article 27(2) and (3); and

(g) detailed information about any overhauls, repairs, replacements and modifications relating to the propeller.

SCHEDULE 7 **Articles 64 to 71 and 78**

Flight crew of aircraft – licences, ratings, qualifications and maintenance of licence privileges

PART A – FLIGHT CREW LICENCES

Section 1 – United Kingdom Licences

Sub-Section 1 AEROPLANE PILOTS

Private Pilot's Licence (Aeroplanes)

Minimum age – 17 years

*

Privileges:

(1) Subject to paragraph (2), the holder of a Private Pilot's Licence (Aeroplanes) is entitled to fly as pilot in command or co-pilot of an aeroplane of any of the types or classes specified or otherwise falling within an aircraft rating included in the licence.

(2) The holder may not:

(a) fly such an aeroplane for the purpose of commercial air transport, public transport or aerial work except in accordance with paragraph (3);

(b) receive any remuneration for services as a pilot on a flight except in accordance with paragraph (4);

(c) unless the licence includes an instrument rating (aeroplane) or an instrument meteorological conditions rating (aeroplanes), fly as pilot in command of such an aeroplane:

(i) on a flight outside controlled airspace if the flight visibility is less than three km;

(ii) on a special VFR flight in a control zone in a flight visibility of less than 10 km except on a route or in an aerodrome traffic zone notified for the purpose of this sub-paragraph; or

(iii) out of sight of the surface;

(d) unless the licence includes a night rating (aeroplanes) or a night qualification (aeroplane) fly as pilot in command of such an aeroplane at night;

(e) unless the licence includes an instrument rating (aeroplane), fly as pilot in command or co-pilot of such an aeroplane flying in Class A, B or C airspace in circumstances which require compliance with the Instrument Flight Rules;

(f) unless the licence includes an instrument rating (aeroplane) or an instrument meteorological conditions rating (aeroplanes), fly as pilot in command or co-pilot of such an aeroplane flying in Class D or E airspace in circumstances which require compliance with the Instrument Flight Rules; or

(g) fly as pilot in command of such an aeroplane carrying passengers unless:

(i) within the preceding 90 days the holder has made at least three take-offs and three landings as the sole manipulator of the controls of an aeroplane of the same type or class; and

(ii) if such a flight is to be carried out at night and the licence does not include an instrument rating (aeroplane), at least one of those take-offs and landings has been at night.

* SI 2012/1751

(3) (a) The holder may fly such an aeroplane for the purpose of aerial work which consists of instruction or testing in a club environment provided that, in the case of instruction, the licence includes a flying instructor's rating, class rating instructor rating, flight instructor rating or an assistant flying instructor's rating.

(b) The holder may fly such an aeroplane for the purpose of aerial work which consists of:

(i) towing a glider in flight; or

(ii) a flight for the purpose of dropping of persons by parachute,

in either case in an aeroplane owned, or operated under arrangements entered into, by a flying club of which the holder of the licence and any person carried in the aircraft or in any glider towed by the aircraft are members.

(4) The holder may receive remuneration for services as a pilot on a flight if:

(a) the licence includes a flying instructor's rating, a flight instructor rating or an assistant flying instructor's rating which entitles the holder to give instruction in flying aeroplanes, microlight aeroplanes or SLMGs; and *

(b) the remuneration is for the giving of such instruction or the conducting of such flying tests as are specified in sub-paragraph (3)(a) in an aeroplane, a microlight aeroplane or a SLMG. *

* **Basic Commercial Pilot's Licence (Aeroplanes) deleted**

Commercial Pilot's Licence (Aeroplanes)

Minimum age – 18 years

*

Privileges:

(1) The holder of a Commercial Pilot's Licence (Aeroplanes) is entitled to exercise the privileges of a United Kingdom Private Pilot's Licence (Aeroplanes) which includes an instrument meteorological conditions rating (aeroplanes) and a night rating (aeroplanes) or night qualification (aeroplane).

(2) The holder is entitled to fly as pilot in command of an aeroplane:

(a) on a special VFR flight notwithstanding that the flight visibility is less than three km;

(b) when the aeroplane is taking off from or landing at any place notwithstanding that the flight visibility below cloud is less than 1800 metres.

(3) Subject to paragraphs (4) and (8), the holder is entitled to fly as pilot in command of an aeroplane of a type or class on which the holder is so qualified and which is specified in an aircraft rating included in the licence when the aeroplane is flying on a flight for any purpose whatsoever.

(4) The holder may not:

(a) unless the licence includes an instrument rating (aeroplane), fly such an aeroplane on any scheduled journey;

(b) fly as pilot in command of an aeroplane carrying passengers unless the holder has carried out at least three take-offs and three landings as pilot flying in an aeroplane of the same type or class or in a flight simulator, approved for the purpose, of the aeroplane type or class to be used, in the preceding 90 days;

* SI 2012/1751

(c) as co-pilot serve at the flying controls in an aeroplane carrying passengers during take-off and landing unless the holder has served as a pilot at the controls during take-off and landing in an aeroplane of the same type or class or in a flight simulator, approved for the purpose, of the aeroplane type or class to be used, in the preceding 90 days;

(d) if the licence does not include an instrument rating (aeroplane), fly as pilot in command of an aeroplane carrying passengers at night unless during the previous 90 days at least one of the take-offs and landings required by sub-paragraph (b) has been at night;

(e) unless the licence includes an instrument rating (aeroplane), fly any such aeroplane which has a maximum total weight authorised exceeding 2300kg on any flight for the purpose of commercial air transport or public transport, except a flight beginning and ending at the same aerodrome and not extending beyond 25 nautical miles from that aerodrome;

(f) fly such an aeroplane on a flight for the purpose of commercial air transport or public transport unless it is certificated for single pilot operation;

(g) fly such an aeroplane on any flight for the purpose of commercial air transport or public transport after attaining the age of 60 years unless the aeroplane is fitted with dual controls and carries a second pilot who has not attained the age of 60 years and who holds an appropriate licence under this Order entitling the second pilot to act as pilot in command or co-pilot of that aeroplane; or

(h) unless the licence includes an instrument rating (aeroplane), fly as pilot in command or co-pilot of such an aeroplane flying in Class A, B or C airspace in circumstances which require compliance with the Instrument Flight Rules.

(5) Subject to paragraph (6), the holder is entitled to fly as pilot in command of an aeroplane of a type or class specified in an instructor's rating included in the licence on a flight for the purpose of aerial work which consists of instruction or testing in a club environment.

(6) The holder may exercise the privileges specified in paragraph (5) only an aeroplane which the holder is entitled to fly as pilot in command on a private flight, an aerial work flight, a public transport flight or a commercial air transport flight under the privileges set out in paragraph (1) or (2) of these privileges.

(7) Subject to paragraph (8), the holder is entitled to fly as co-pilot of any aeroplane of a type specified in an aircraft rating included in the licence when the aeroplane is flying on a flight for any purpose whatsoever.

(8) The holder must not at any time after attaining the age of 65 years act as pilot in command or co-pilot of any aeroplane on a flight for the purpose of commercial air transport or public transport.

Airline Transport Pilot's Licence (Aeroplanes)

Minimum age – 21 years

*

Privileges:

The holder of an Airline Transport Pilot's Licence (Aeroplanes) is entitled to exercise the privileges of a United Kingdom Commercial Pilot's Licence (Aeroplanes) except that the restriction at sub-paragraph (4)(f) of those privileges does not apply.

* SI 2012/1751

Sub-Section 2 HELICOPTER AND GYROPLANE PILOTS

Private Pilot's Licence (Helicopters)

Minimum age – 17 years

*

Privileges:

(1) Subject to paragraph (2), the holder of a Private Pilot's Licence (Helicopters) is entitled to fly as pilot in command or co-pilot of any helicopter of a type specified in an aircraft rating included in the licence.

(2) The holder may not:

(a) fly such a helicopter for the purpose of public transport or aerial work except in accordance with paragraph (3);

(b) receive any remuneration for services as a pilot on a flight other than remuneration for the giving of such instruction or the conducting of such flying tests as are specified in paragraph (3);

(c) fly as pilot in command of such a helicopter at night unless the licence includes a night rating (helicopters) or a night qualification (helicopter);

(d) unless the licence includes an instrument rating (helicopter) fly as pilot in command or co-pilot of such a helicopter in circumstances which require compliance with the Instrument Flight Rules:

(i) in Class A, B or C airspace at any time; or

*

(ii) in Class D, E, F or G airspace unless flying at night, remaining clear of cloud and with the surface in sight; or

(e) fly as pilot in command of such a helicopter carrying passengers unless:

(i) within the preceding 90 days the holder has made at least three circuits, each to include take-offs and landings, as the sole manipulator of the controls of a helicopter of the same type; or

(ii) if the privileges are to be exercised by night and the licence does not include an instrument rating, within the preceding 90 days the holder has made at least three circuits, each to include take-offs and landings by night as the sole manipulator of the controls of a helicopter of the same type.

(3) The holder may fly such a helicopter for the purpose of aerial work which consists of instruction or testing in a club environment provided that, in the case of instruction, the licence includes a flying instructor's rating, a flight instructor rating or an assistant flying instructor's rating.

Private Pilot's Licence (Gyroplanes)

Minimum age – 17 years

*

Privileges:

(1) Subject to paragraph (2), the holder of a Private Pilot's Licence (Gyroplanes) is entitled to fly as pilot in command or co-pilot of any gyroplane of a type specified in the aircraft rating included in the licence.

(2) The holder may not:

* SI 2012/1751

(a) fly such a gyroplane for the purpose of public transport or aerial work except in accordance with paragraph (3);

(b) receive any remuneration for services as a pilot on a flight other than remuneration for the giving of such instruction or the conducting of such flying tests as are specified in paragraph (3);

(c) fly as pilot in command of such a gyroplane at night unless the licence includes a night rating (gyroplanes) and the holder has within the immediately preceding 13 months carried out as pilot in command not less than five take-offs and five landings at a time when the depression of the centre of the sun was not less than 12° below the horizon.

(3) The holder may fly such a gyroplane for the purpose of aerial work which consists of instruction or testing in a club environment provided that, in the case of instruction, the licence includes a flying instructor's rating, a flight instructor rating or an assistant flying instructor's rating.

Commercial Pilot's Licence (Helicopters and Gyroplanes)

Minimum age – 18 years

* |

Privileges:

(1) Subject to paragraphs (2) and (5), the holder of a Commercial Pilot's Licence (Helicopters and Gyroplanes) is entitled:

(a) to exercise the privileges of a United Kingdom Private Pilot's Licence (Helicopters) or a United Kingdom Private Pilot's Licence (Gyroplanes) which includes respectively either a night rating (helicopters) or night qualification (helicopter) or a night rating (gyroplanes); and

(b) to fly as pilot in command of any helicopter or gyroplane on which the holder is so qualified and which is of a type specified in an aircraft rating included in the licence when the helicopter or gyroplane is flying on a flight for any purpose whatsoever.

(2) The holder may not:

(a) fly such a helicopter on a public transport flight unless it is certificated for single pilot operation;

(b) fly such a helicopter on any public transport flight after attaining the age of 60 years unless the helicopter is fitted with dual controls and carries a second pilot who has not attained the age of 60 years and who holds an appropriate licence under this Order entitling the second pilot to act as pilot in command or co-pilot of that helicopter;

(c) unless the licence includes an instrument rating (helicopter) fly as pilot in command of such a helicopter in circumstances which require compliance with the Instrument Flight Rules:

(i) in Class A, B or C airspace at any time; or

(ii) in Class D, E, F or G airspace unless remaining clear of cloud and with the surface in sight;

(d) fly as pilot in command of a helicopter carrying passengers unless the holder has carried out at least three circuits, each to include take-offs and landings, as pilot flying in a helicopter of the same type or a flight simulator of the helicopter type to be used, in the preceding 90 days;

* SI 2012/1751

(e) unless the licence includes an instrument rating (helicopter) act as pilot in command of a helicopter carrying passengers at night unless during the previous 90 days at least one of the take-offs and landings required in sub-paragraph (d) has been at night;

(f) fly such a gyroplane on a public transport flight unless it is certificated for single pilot operation;

(g) fly such a gyroplane at night unless the holder has within the immediately preceding 13 months carried out as pilot in command not less than five take-offs and five landings at a time when the depression of the centre of the sun was not less than 12º below the horizon; or

(h) fly such a gyroplane on a public transport flight after attaining the age of 60 years unless the gyroplane is fitted with dual controls and carries a second pilot who has not attained the age of 60 years and who holds an appropriate licence under this Order entitling him to act as pilot in command or co-pilot of that gyroplane.

(3) Subject to paragraphs (4) and (5), the holder is entitled to fly as co-pilot of any helicopter or gyroplane of a type specified in an aircraft rating included in the licence when the helicopter or gyroplane is flying on a flight for any purpose whatsoever.

(4) The holder may not:

(a) unless the licence includes an instrument rating (helicopter) fly as co-pilot of a helicopter flying in circumstances which require compliance with the Instrument Flight Rules:

(i) in Class A, B or C airspace at any time; or

(ii) in Class D, E, F or G airspace unless remaining clear of cloud and with the surface in sight; or

(b) as co-pilot serve at the flying controls in a helicopter carrying passengers during take-off and landing unless the holder has served as a pilot at the controls during take-off and landing in a helicopter of the same type or in a flight simulator of the helicopter type to be used, in the preceding 90 days.

(5) The holder must not at any time after attaining the age of 65 years act as pilot in command or co-pilot of any helicopter or gyroplane on a public transport flight.

Airline Transport Pilot's Licence (Helicopters and Gyroplanes)

Minimum age – 21 years

*

Privileges:

The holder of an Airline Transport Pilot's Licence (Helicopters and Gyroplanes) is entitled to exercise the privileges of a United Kingdom Commercial Pilot's Licence (Helicopters and Gyroplanes) except that the restrictions at sub-paragraphs (2)(a) and (2)(f) of those privileges do not apply.

*

Commercial Pilot's Licence (Helicopters)

Minimum age – 18 years

Privileges:

(1) Subject to paragraphs (2) and (5), the holder of a Commercial Pilot's Licence (Helicopters) is entitled:

(a) to exercise the privileges of a Private Pilot's Licence (Helicopters) which includes a night rating (helicopters); and

* SI 2012/1751

*

(b) to fly as pilot in command of any helicopter which is of a type specified in an aircraft rating included in the licence when the helicopter is flying on a flight for any purpose.

(2) The holder may not:

(a) fly such a helicopter for the purpose of commercial air transport[(a)] or public transport unless it is certificated for single-pilot operation;

(b) fly such a helicopter for the purpose of commercial air transport or public transport after attaining the age of 60 years unless the helicopter is fitted with dual controls and carries a second pilot who has not attained the age of 60 years and who holds an appropriate licence under this Order entitling the second pilot to act as pilot in command or co-pilot of that helicopter;

(c) unless the licence includes an instrument rating (helicopter), fly as pilot in command of such a helicopter in circumstances which require compliance with the Instrument Flight Rules:

(i) in Class A, B or C airspace at any time; or

(ii) in Class D, E, F or G airspace unless remaining clear of cloud and with the surface in sight;

(d) fly as pilot in command of a helicopter carrying passengers unless the holder has carried out at least three circuits, each to include a take-off and landing, as pilot flying in a helicopter of the same type or a flight simulator of the helicopter type to be used, during the previous 90 days;

(e) unless the licence includes an instrument rating (helicopter), act as pilot in command of a helicopter carrying passengers at night unless during the previous 90 days at least one of the take-offs and landings required in sub-paragraph (d) has been at night.

(3) Subject to paragraphs (4) and (5), the holder is entitled to fly as co-pilot of any helicopter of a type specified in an aircraft rating included in the licence when the helicopter is flying on a flight for any purpose whatsoever.

(4) The holder may not:

(a) unless the licence includes an instrument rating (helicopter), fly as co-pilot of such a helicopter flying in circumstances which require compliance with the Instrument Flight Rules:

(i) in Class A, B or C airspace at any time; or

(ii) in Class D, E, F or G airspace unless remaining clear of cloud and with the surface in sight; or

(b) as co-pilot serve at the flying controls in a helicopter carrying passengers during take off and landing unless the holder has served as a pilot at the controls during take off and landing in a helicopter of the same type or in a flight simulator of the helicopter type to be used, during the previous 90 days.

(5) The holder must not at any time after attaining the age of 65 years act as pilot in command or co-pilot of any helicopter on a flight for the purpose of commercial air transport or public transport.

(a) A United Kingdom Commercial Pilot's Licence is not valid to fly as pilot in command of a non-EASA aircraft that is referred to in paragraphs (a)(ii), (d) or (h) of Annex II of the Basic EASA Regulation on a commercial air transport flight – see article 50A(2) and footnote (a) to that article.

* SI 2012/1751

* **Airline Transport Pilot's Licence (Helicopters)**

Minimum age – 21 years

Privileges:

The holder of an Airline Transport Pilot's Licence (Helicopters) is entitled to exercise the privileges of a Commercial Pilot's Licence (Helicopters) except that the restriction at sub-paragraph (2)(a) of those privileges does not apply.

* SI 2012/1751

Sub-Section 3 BALLOON AND AIRSHIP PILOTS

Private Pilot's Licence (Balloons and Airships)

Minimum age – 17 years

* |

Privileges:

(1) Subject to paragraph (2), the holder of a Private Pilot's Licence (Balloons and Airships) is entitled to fly as pilot in command of any type of balloon or airship on which the holder is so qualified and which is specified in an aircraft rating in the licence and as co-pilot of any type of balloon or airship specified in such a rating.

(2) The holder may not:

(a) fly such a balloon or airship for the purpose of public transport or aerial work, other than aerial work which consists of instruction or testing in a club environment;

(b) receive any remuneration for services as a pilot on a flight other than remuneration for the giving of such instruction or the conducting of such flying tests as are specified in sub-paragraph (a); or

(c) fly such a balloon unless the holder has within the immediately preceding 13 months carried out as pilot in command in a free balloon at least five flights each of not less than five minutes duration.

Commercial Pilot's Licence (Balloons)

Minimum age – 18 years

* |

Privileges:

(1) The holder of a Commercial Pilot's Licence (Balloons) is entitled to exercise the privileges of a United Kingdom Private Pilot's Licence (Balloons and Airships).

(2) Subject to paragraph (3), the holder is entitled to fly as pilot in command or co-pilot of any type of balloon specified in the aircraft rating included in the licence when the balloon is flying for any purpose whatsoever.

(3) The holder may not act as pilot in command on a flight for the purpose of the public transport of passengers unless the holder has within the immediately preceding 90 days carried out as pilot in command in a free balloon at least three flights each of not less than five minutes duration.

Commercial Pilot's Licence (Airships)

Minimum age – 18 years

* |

Privileges:

(1) The holder of a Commercial Pilot's Licence (Airships) is entitled to exercise the privileges of a United Kingdom Private Pilot's Licence (Balloons and Airships).

(2) The holder is entitled to fly as pilot in command of any type of airship on which the holder is so qualified and which is specified in an aircraft rating included in the licence and as co-pilot of any type of airship specified in such a rating, when the airship is flying for any purpose whatsoever.

* SI 2012/1751

Sub-Section 4 GLIDER PILOTS

Commercial Pilot's Licence (Gliders)

Minimum age – 18 years

*

Privileges:

The holder of a Commercial Pilot's Licence (Gliders) is entitled to fly for any purpose as pilot in command or co-pilot of:

(a) any glider which has a maximum total weight authorised of not more than 680 kg; or

(b) of a type specified in the rating included in the licence.

Sub-Section 5 OTHER FLIGHT CREW

Flight Navigator's Licence

Minimum age – 21 years

*

Privileges:

The holder of a Flight Navigator's Licence is entitled to act as flight navigator in any aircraft.

Flight Engineer's Licence

Minimum age – 21 years

*

Privileges:

The holder of a Flight Engineer's Licence is entitled to act as flight engineer in any type of aircraft specified in an aircraft rating included in the licence.

Flight Radiotelephony Operator's Licence

Minimum age – 16 years

*

Privileges:

The holder of a Flight Radiotelephony Operator's Licence is entitled to operate radiotelephony apparatus in any aircraft if the stability of the frequency radiated by the transmitter is maintained automatically but is not entitled to operate the transmitter, or to adjust its frequency, except by the use of external switching devices.

* **Section 2 – Deleted**

* SI 2012/1751

Section 3 – National Private Pilot's Licence

National Private Pilot's Licence (Aeroplanes)

Minimum age – 17 years

*

Privileges and conditions:

(1) Subject to paragraphs (2) to (8) the holder of the licence is entitled to fly as pilot in command of any SSEA, microlight aeroplane or SLMG for which a class rating is included in the licence.

Flight outside the United Kingdom

(2) The holder may not fly:

(a) such a SSEA or a microlight aeroplane outside the United Kingdom except with the permission of the competent authority for the airspace in which the aircraft is being flown; or

(b) such a SLMG in or over the territory of a Contracting State other than the United Kingdom except in accordance with a permission granted by the competent authority of that State provided that the holder may fly a SLMG outside the United Kingdom if the licence includes a SLMG rating and a medical certificate appropriate for such a flight.

Flight for purpose of commercial air transport, public transport and aerial work

(3) The holder may not fly any such aeroplane for the purpose of commercial air transport, public transport or aerial work except in the circumstances specified in paragraph (4) or (5).

(4) The circumstances first referred to in paragraph (3) are that the holder flies such an aeroplane for the purpose of aerial work which consists of towing another aeroplane or glider in flight:

(a) in an aeroplane owned, or operated under arrangements entered into, by a flying club of which the holder of the licence and any person carried in the towing aeroplane or in any aeroplane or glider being towed are members; or

(b) in an aeroplane owned, or operated under arrangements entered into, by an organisation approved by the CAA for the purpose of this provision when:

(i) the holder of the licence is a member of an organisation approved by the CAA for the purpose of this provision; and

(ii) any person carried in the towing aeroplane or in any aeroplane or glider being towed is a member of an organisation approved by the CAA for the purpose of this provision.

(5) The circumstances secondly referred to in paragraph (3) are that the holder flies such an aeroplane for the purposes of aerial work which consists of instruction or testing in a club environment provided that, in the case of instruction, the licence includes a flying instructor's rating or an assistant flying instructor's rating.

Receipt of remuneration

(6) The holder may receive any remuneration for services as a pilot on a flight only if the licence includes a flying instructor's rating or an assistant flying instructor's rating entitling the holder to give instruction in flying microlight aeroplanes or SLMGs, and the holder gives such instruction or conducts such flying tests as are specified in paragraph (5) in a microlight aeroplane or a SLMG.

Prohibitions on flight in specified conditions

(7) The holder may not fly:

(a) as pilot in command of such a SSEA on a flight outside controlled airspace when the flight visibility is less than five km;

(b) as pilot in command of such a SLMG or microlight aeroplane on a flight outside controlled airspace when the flight visibility is less than three km;

(c) as pilot in command of any such aeroplane:

(i) on a special VFR flight in a control zone in a flight visibility of less than 10km;

(ii) out of sight of the surface; or

(iii) at night; or

(d) as pilot in command of any such aeroplane in circumstances which require compliance with the Instrument Flight Rules.

Carriage of persons

(8) The holder may not fly as pilot in command of any such aeroplane:

(a) if the total number of persons carried (including the pilot) exceeds four; or

(b) when carrying passengers unless within the preceding 90 days the holder has made at least three take-offs and three landings as the sole manipulator of the controls of an aeroplane of the same class as that being flown.

* **National Private Pilot's Licence (Helicopters)**

Minimum age – 17 years

Privileges and conditions:

(1) Subject to paragraphs (2) to (4) the holder of the licence is entitled to fly as pilot in command of a single-engine helicopter with a maximum total weight authorised of 2000 kg or less, carrying a maximum of 3 passengers, such that there are never more than 4 persons on board.

Flight outside the United Kingdom.

(2) The holder may not fly such a helicopter outside the United Kingdom except with the permission of the competent authority for the airspace in which the aircraft is being flown.

Flight for purpose of commercial air transport, public transport and aerial work

(3) The holder may not fly such a helicopter for the purpose of commercial air transport, public transport or aerial work.

Carriage of persons

(4) The holder may not fly as pilot in command of such a helicopter when carrying passengers unless within the preceding 90 days the holder has made at least three take-offs and three landings as the sole manipulator of the controls of a helicopter of the same type as that being flown.

* SI 2012/1751

PART B – RATINGS AND QUALIFICATIONS

Section 1 – Ratings and qualifications which may be included in United Kingdom licences but not in National Private Pilot's Licences *

Sub-Section 1 AIRCRAFT RATINGS

* **2** An aircraft rating may be included in a United Kingdom licence granted under Part 7, and, subject to the provisions of this Order and of the licence, the inclusion of a rating in a licence has the consequences specified as follows.

3 When included in a pilot licence an aircraft rating entitles the holder of the licence to act as pilot of aircraft of the types and classes specified in the aircraft rating and different types and classes of aircraft may be specified in respect of different privileges of a licence.

4 When included in a Flight Engineer's Licence an aircraft rating entitles the holder of the licence to act as flight engineer only of aircraft of a type specified in the aircraft rating.

Sub-Section 2 OTHER RATINGS

4 Subject to article 82(2), the following ratings and qualifications may be included in a United Kingdom pilot licence granted under Part 7 and, subject to the provisions of this Order and of the licence, the inclusion of a rating or qualification in a licence has the consequences respectively specified as follows. *

Instrument meteorological conditions rating (aeroplanes)

* (1) Subject to paragraph (2), within the United Kingdom an instrument meteorological conditions rating (aeroplanes) entitles the holder of a United Kingdom Private Pilot's Licence (Aeroplanes) to fly as pilot in command of an aeroplane without being subject to the restrictions contained in paragraph (2)(c) or (f) of the privileges of the United Kingdom Private Pilot's Licence (Aeroplanes).

(2) The rating does not entitle the holder of the licence to fly:

(a) on a special VFR flight in a control zone in a flight visibility of less than three km; or

(b) when the aeroplane is taking off or landing at any place if the flight visibility below cloud is less than 1800 metres.

Instrument rating (aeroplane)

An instrument rating (aeroplane) entitles the holder of the licence to act as pilot in command or co-pilot of an aeroplane flying in controlled airspace in circumstances which require compliance with the Instrument Flight Rules.

Instrument rating (helicopter)

An instrument rating (helicopter) entitles the holder of the licence to act as pilot in command or co-pilot of a helicopter flying in controlled airspace in circumstances which require compliance with the Instrument Flight Rules.

Night rating (aeroplanes)

A night rating (aeroplanes) entitles the holder of a United Kingdom Private Pilot's Licence (Aeroplanes) to act as pilot in command of an aeroplane at night. *

Night qualification (aeroplane)

A night qualification (aeroplane) entitles the holder of a United Kingdom Private Pilot's Licence (Aeroplanes) to act as pilot in command of an aeroplane at night. *

Night rating (helicopters)

* SI 2012/1751

A night rating (helicopters) entitles the holder of a United Kingdom Private Pilot's Licence (Helicopters) to act as pilot in command of a helicopter at night.

Night qualification (helicopter)

A night qualification (helicopter) entitles the holder of a United Kingdom Private Pilot's Licence (Helicopters) or a JAR-FCL Private Pilot Licence (Helicopter) to act as pilot in command of a helicopter at night.

Night rating (gyroplanes)

A night rating (gyroplanes) entitles the holder of a United Kingdom Private Pilot's Licence (Gyroplanes) to act as pilot in command of a gyroplane at night.

Towing rating (flying machines)

A towing rating (flying machines) entitles the holder of the licence to act as pilot of a flying machine while towing a glider in flight for the purpose of public transport or aerial work.

Flying instructor's rating

A flying instructor's rating entitles the holder of the licence to give instruction in flying aircraft of such types and classes as may be specified in the rating for that purpose.

Assistant flying instructor's rating

(1) Subject to paragraph (2), an assistant flying instructor's rating entitles the holder of the licence to give instruction in flying aircraft of such types and classes as may be specified in the rating for that purpose.

(2) (a) Such instruction must only be given under the supervision of a person present during the take-off and landing at the aerodrome at which the instruction is to begin and end and who holds a pilot's licence endorsed with a flying instructor's rating entitling the holder to instruct on an aircraft of the same type or class as the aircraft on which instruction is being given.

(b) An assistant flying instructor's rating does not entitle the holder of the licence to give directions to a person undergoing instruction in respect of the performance of that person's:

(i) first solo flight;

(ii) first solo flight by night;

(iii) first solo cross-country flight otherwise than by night; or

(iv) first solo cross-country flight by night.

Flight instructor rating (aeroplane)

A flight instructor rating (aeroplane) entitles the holder of the licence to give instruction in flying aircraft of such types and classes as may be specified in the rating for that purpose subject to the restrictions specified below.

Restrictions – restricted period

(1) Until the holder of a flight instructor rating (aeroplane) has completed at least 100 hours flight instruction and, in addition, has supervised at least 25 solo flights by students, the privileges of the rating are restricted.

(2) The restrictions will be removed from the rating when the requirements specified in paragraph (1) have been met and on the recommendation of the supervising flight instructor (aeroplane).

Restrictions – restricted privileges

The privileges will be restricted to carrying out under the supervision of the holder of a flight instructor rating (aeroplane) approved for this purpose:

* (a) flight instruction for:

(i) the issue of a National Private Pilot's Licence (Aeroplanes) and a United Kingdom Private Pilot Licence (Aeroplanes);

(ii) those parts of integrated courses which are at United Kingdom Private Pilot's Licence (Aeroplanes) level; and

(iii) class and type ratings for single-engine aeroplanes,

other than for the approval of first solo flights by day or by night and first solo cross country flights by day or by night; and

(b) night flying instruction.

Flight instructor rating (helicopter)

A flight instructor rating (helicopter) entitles the holder of the licence to give instruction in flying helicopters of such types as may be specified in the rating for that purpose subject to the restrictions specified below.

Restrictions – restricted period

(1) Until the holder of a flight instructor rating (helicopter) has completed at least 100 hours flight instruction and, in addition, has supervised at least 25 solo flights by students, the privileges of the rating are restricted.

(2) The restrictions will be removed from the rating when the requirements specified in paragraph (1) have been met and on the recommendation of the supervising flight instructor (helicopter).

Restrictions – restricted privileges

(3) The privileges are restricted to carrying out under the supervision of the holder of a flight instructor rating (helicopter) approved for this purpose -

* (a) flight instruction for:

(i) the issue of a National Private Pilot's Licence (Helicopters) and a United Kingdom Private Pilot's Licence (Helicopters);

(ii) those parts of integrated courses which are at United Kingdom Private Pilot's Licence (Helicopters) level; and

(iii) type ratings for single-engine helicopters,

other than for the approval of first solo flights by day or by night and first solo cross country flights by day or by night; and

(b) night flying instruction.

Type rating instructor rating (multi-pilot aeroplane)

A type rating instructor rating (multi-pilot aeroplane) entitles the holder to instruct licence holders for the issue of a multi-pilot aeroplane type rating, including the instruction required for multi-crew co-operation.

Type rating instructor rating (helicopter)

A type rating instructor rating (helicopter) entitles the holder to instruct licence holders for the issue of a type rating, including the instruction required for multi-crew co-operation.

* SI 2012/1751

Class rating instructor rating (single-pilot aeroplane)

A class rating instructor rating (single-pilot aeroplane) entitles the holder to instruct licence holders for the issue of a type or class rating for single-pilot aeroplanes.

Instrument rating instructor rating (aeroplane)

An instrument rating instructor rating (aeroplane) entitles the holder to conduct flight instruction for the issue of an instrument rating (aeroplane) or an instrument meteorological
* conditions rating (aeroplanes) for a United Kingdom licence.

Instrument rating instructor rating (helicopter)

An instrument rating instructor rating (helicopter) entitles the holder to conduct flight
* instruction for the issue of an instrument rating (helicopter) for a United Kingdom licence.

5 For the purposes of this Section:

'Day' means the time from half an hour before sunrise until half an hour after sunset (both times exclusive), sunset and sunrise being determined at surface level;

'Solo flight' means a flight on which the pilot of the aircraft is not accompanied by a person holding a pilot's licence granted or rendered valid under this Order;

'Cross-country flight' means any flight during the course of which the aircraft is more than three nautical miles from the aerodrome of departure.

Section 2 – Aircraft and instructor ratings which may be included in United Kingdom
* **aeroplane pilot licences and in National Private Pilot's Licences (Aeroplanes)**

1 The following ratings may be included in a United Kingdom aeroplane pilot licence or a National Private Pilot's Licence (Aeroplanes) granted under Part 7, and, subject to the provisions of this Order and of the licence, the inclusion of a rating in a licence has the consequences specified as follows.

Microlight class rating

(1) Subject to paragraph (2) and to the conditions of the licence in which it is included, a microlight class rating entitles the holder to act as pilot in command of any microlight aeroplane.

(2) (a) If the current certificate of revalidation for the rating is endorsed "single seat only" the holder is only entitled to act as pilot in command of any single seat microlight aeroplane.

(b) (i) If the aeroplane has:

(aa) three axis controls and the holder's previous training and experience has only been in an aeroplane with flexwing/weightshift controls;

(bb) flexwing/weightshift controls and the holder's previous training and experience has only been in an aeroplane with three axis controls; or

(cc) more than one engine,

before exercising the privileges of the rating the holder must complete appropriate differences training.

(ii) The differences training must be given by a flight instructor entitled to instruct on the aeroplane on which the training is being given, recorded in the holder's personal flying logbook and endorsed and signed by the instructor conducting the training.

* SI 2012/1751

(c) (i) Where the aeroplane is to be operated from water during take-off and landing, before exercising the privileges of the rating the holder must:

(aa) complete appropriate differences training; and

(bb) attain a pass in the Private or Professional Seamanship examination.

(ii) The differences training must be given by a flight instructor entitled to instruct on the aeroplane on which the training is being given, recorded in the holder's personal flying logbook and endorsed and signed by the instructor conducting the training.

SSEA class rating

(1) Subject to paragraph (2) and to the conditions of the licence in which it is included, a SSEA class rating entitles the holder to act as pilot in command of any SSEA with a maximum take off weight authorised of not more than 2000kg excluding any such aeroplane which is a SLMG or a microlight aeroplane.

(2) (a) If the current certificate of revalidation for the rating is endorsed "single seat only" the holder is only entitled to act as pilot in command of a single seat SSEA.

(b) (i) If the aeroplane:

(aa) is fitted with a tricycle undercarriage;;

(bb) is fitted with a tailwheel;

(cc) is fitted with a supercharger or turbo-charger;

(dd) is fitted with a variable pitch propeller;

(ee) is fitted with retractable landing gear;

(ff) is fitted with a cabin pressurisation system; or

(gg) has a maximum continuous cruising speed in excess of 140 knots indicated airspeed,

before exercising the privileges of the rating, the holder must complete appropriate differences training.

(ii) The differences training must be given by a flight instructor entitled to instruct on the aeroplane on which the training is being given, recorded in the holder's personal flying logbook and endorsed and signed by the instructor conducting the training.

(c) (i) If the aeroplane is to be operated from water during take-off and landing, before exercising the privileges of the rating the holder must:

(iva) complete appropriate differences training; and

(ivb) attain a pass in the Private or Professional Seamanship examination.

(ii) The differences training must be given by a flight instructor entitled to instruct on the aeroplane on which the training is being given, recorded in the holder's personal flying logbook and endorsed and signed by the instructor conducting the training.

SLMG class rating

(1) Subject to paragraph (2) and to the conditions of the licence in which it is included, a SLMG class rating entitles the holder to act as pilot in command of any SLMG.

(2) If the current certificate of revalidation for the rating is endorsed "single seat only" the holder is only entitled to act as pilot in command of a single seat SLMG.

Flying instructor's rating (microlight)

A flying instructor's rating (microlight) entitles the holder of the licence to give instruction in flying microlight aeroplanes.

Flying instructor's rating (SLMG)

A flying instructor's rating (SLMG) entitles the holder of the licence to give instruction in flying SLMGs.

Assistant flying instructor's rating (microlight)

(1) Subject to paragraph (2), an assistant flying instructor's rating (microlight) entitles the holder of the licence to give instruction in flying microlight aeroplanes.

(2) (a) Such instruction must only be given under the supervision of a person present during the take-off and landing at the aerodrome at which the instruction is to begin and end and holding a pilot's licence endorsed with a flying instructor's rating entitling that person to instruct on a microlight aeroplane with the same type of control system as the microlight aeroplane on which instruction is being given.

(b) An assistant flying instructor's rating (microlight) does not entitle the holder of the licence to give directions to the person undergoing instruction in respect of the performance of that person's:

(i) first solo flight; or

(ii) first solo cross-country flight.

2 For the purposes of this Section, 'solo flight' and 'cross-country flight' have the same meaning as in Section 1.

* **SECTION 3 – Rating which may be included in National Private Pilot's Licences (Helicopters)**

A helicopter type rating for a single engine helicopter with a maximum total weight authorised of 2000 kg or less may be included in a National Private Pilot's Licence (Helicopters) granted under Part 7.

* SI 2012/1751

PART C MAINTENANCE OF LICENCE PRIVILEGES

Section 1 – Requirement for Certificate of Test or Experience

1 Appropriateness of certificate

* | (1) For the purposes of articles 66(2), 68(1), 69(2) or 71 the type of certificate specified in column 4 in the following table is appropriate for the flight or functions described in column 3 carried out by the holder of the type of licence specified in column 2.

Case	*Class of Licence*	*Description of Flight*	*Certificate Required*
A	Private Pilot's Licence (Gyroplanes)	Any flight within the privileges of the licence	Certificate of test or certificate of experience
	Private Pilot's Licence (Aeroplanes)	Any flight within the privileges of a microlight aeroplane class rating included in the licence	Certificate of test or certificate of experience
B	Commercial Pilot's Licence (Balloons) Commercial Pilot's Licence (Gliders) Commercial Pilot's Licence (Airships)	Carriage of passengers on a flight for which the holder of the licence receives remuneration	Certificate of test
C	Commercial Pilot's Licence (Balloons) Commercial Pilot's Licence (Gliders) Commercial Pilot's Licence (Airships)	For public transport	Certificate of test
D	Commercial Pilot's Licence (Balloons) Commercial Pilot's Licence (Gliders) Commercial Pilot's Licence (Airships)	For aerial work	Certificate of test or certificate of experience
E	Commercial Pilot's Licence (Balloons) Commercial Pilot's Licence (Gliders) Commercial Pilot's Licence (Airships)	Any flight within the privileges of a Private Pilot's Licence	Certificate of test or certificate of experience
F	Flight Navigator's Licence	Flights to which article 47 applies	Certificate of experience

(2) For the purposes of this Part of this Schedule, references to Cases are references to the Cases indicated in the first Column of the Table above.

Certificate of test

* | **2** A certificate of test required by article 66(2), 68(1) or 69(2) must be signed by a person authorised by the CAA to sign certificates of this kind and certify the following:

(a) the functions to which the certificate relates;

(b) that the person signing the certificate is satisfied that on a date specified in the certificate the holder of the licence or personal flying logbook of which the certificate forms a part passed an appropriate test of the holder's ability to perform the functions to which the certificate relates;

(c) the type of aircraft or flight simulator in or by means of which the test was conducted; and

(d) the date on which it was signed.

* SI 2012/1751

Nature of test

3 The appropriate test referred to in paragraph 2:

(a) in the case of a test which entitles the holder of the licence of which the certificate forms part to act as pilot in command or co-pilot (or both) of aircraft of the type, types or class specified in the certificate:

(i) is a test of the pilot's competence to fly the aircraft as pilot in command or co-pilot (or both); and

(ii) must where the CAA so specifies for the whole or part of a test, be conducted in an aircraft in flight or by means of a flight simulator approved by the CAA.

(b) in the case of a test which entitles the holder of the licence of which the certificate forms part to perform the functions to which a flying instructor's rating (gyroplanes), an assistant flying instructor's rating (gyroplanes) or an instrument meteorological conditions rating (aeroplanes) relate:

(i) is a test of the holder's ability to perform the functions to which the rating relates; and

(ii) must where the CAA so specifies for the whole or part of the test, be conducted in an aircraft in flight.

Period of validity of certificate of test

4 (1) Subject to sub-paragraph (3), a certificate of test required by article 66(2) for a Commercial Pilot's Licence (Balloons) is not valid in relation to a flight made more than 13 months after the last day of the month in which the test was taken. *

(2) Subject to sub-paragraph (3), a certificate of test required by article 66(2) or 69(3) for any other licence, is not valid in relation to a flight made more than 13 months in Cases A, B and E or more than six months in Cases C and D after the last day of the month in which the test was taken. *

(3) In the case of Cases C and D, two certificates of test are together deemed to constitute a valid certificate of test if they certify flying tests conducted on two occasions within the period of 13 months preceding the flight on which the functions are to be performed, such occasions being separated by an interval of not less than four months, and if both certificates are appropriate to those functions.

(4) A certificate of test required by article 68(1) for an instrument meteorological conditions rating (aeroplanes) is not valid in relation to a flight made more than 25 months after the last day of the month in which the test was taken. *

(5) A certificate of test required by article 68(1) for an assistant flying instructor's rating (gyroplanes) and a flying instructor's rating (gyroplanes) is not valid in relation to a flight made more than three years after the last day of the month in which the test was taken. *

Certificate of experience

* **5** A certificate of experience required by article 66(2), 69 (2) or 71 must be signed by a person authorised by the CAA to sign such a certificate and certify:

(a) the functions to which the certificate relates;

(b) in the case of a pilot, that on the date on which the certificate was signed, the holder of the licence or personal flying log book of which it forms part:

* SI 2012/1751

(i) produced the personal flying log book to the person signing the certificate; and

(ii) satisfied the authorised person that the licence holder had appropriate experience in the capacity to which the licence relates within the appropriate period specified in paragraph 6 of this Part of this Schedule;

(c) in the case of a flight navigator, that on the date on which the certificate was signed, the holder of the licence of which it forms part:

(i) produced the licence holder's navigation logs, charts and workings of astronomical observations to the authorised person; and

(ii) satisfied the authorised person that the licence holder had appropriate experience in the capacity to which the licence relates within the appropriate period specified in paragraph 6 of this Part of this Schedule;

(d) in the case of a pilot or flight engineer, the type or types of aircraft in which the experience was gained;

(e) the date on which it was signed.

Period of experience

6 A certificate of experience is not valid unless the experience was gained within the period of 13 months preceding the last day of the month in which the certificate was signed in the case of Cases A, E and F, or six months preceding the last day of the month in which the certificate was signed in the case of Case D. *

Period of validity of certificate of experience

7 A certificate of experience for a Commercial Pilot's Licence (Balloons) is not valid for more than 13 months after the last day of the month in which it was signed and for any other licence is not valid for more than six months after the last day of the month in which it was signed for Case D nor for more than 13 months after it was signed for any other case. *

Section 2 – Requirement for Certificate of Revalidation

Appropriate certificate of revalidation

8 A certificate of revalidation required by article 67(2), 68(2) or 70 is not appropriate to the exercise of the privileges of a flight crew licence unless it is a certificate which accords with this Section.

Type and class ratings

9 (1) Aeroplane type and class ratings

(a) Type ratings and multi-engine class ratings, aeroplane

(i) Validity

Type ratings and multi-engine class ratings for aeroplanes are valid for one year beginning with the date of issue, revalidation or renewal or the last day of the month in which the rating expires if it is revalidated within the period of three months preceding that day. *

(ii) Revalidation

For revalidation of type ratings and multi-engine class ratings, aeroplane, the applicant must satisfy the requirements for the ratings specified in paragraph FCL.740A of Part-FCL. *

* SI 2012/1751

(b) *Single-pilot single-engine class ratings*

(i) *Validity*

* Single-pilot single-engine class ratings for aeroplanes are valid for two years beginning with the date of issue, revalidation or renewal or the last day of the month in which the rating expires if it is revalidated within the period of three months preceding that day.

(ii) *Revalidation of all single-engine piston aeroplane class ratings (land) and all touring motor glider ratings*

For revalidation of single-pilot single-engine piston aeroplane (land) class ratings or touring motor glider class ratings (or both) the applicant must on single engine piston aeroplanes (land) or touring motor gliders (as the case may be) satisfy the requirements for the ratings specified in paragraph FCL.740A of Part-FCL. *

(iii) *Revalidation of single-engine turbo-prop aeroplanes (land) single-pilot*

For revalidation of single-engine turbo-prop (land) class ratings the applicant must within the three months preceding the last day of the month in which the rating expires pass a proficiency check with an authorised examiner on an aeroplane in the relevant class. *

(iv) *Revalidation of single-engine piston aeroplanes (SEA)*

For revalidation of single-pilot single-engine piston aeroplane (SEA) class ratings the applicant must:

(aa) within the three months preceding the last day of the month in which the rating expires; pass a proficiency check with an authorised examiner on a single-engine piston aeroplane (SEA); or *

(bb) within the 12 months preceding the last day of the month in which the rating expires complete at least 12 hours of flight time including at least six hours of pilot in command time on either a single-engine piston aeroplane (SEA) or a single-engine piston aeroplane (land) and at least 12 water take-offs and 12 alightings on water; and either complete a training flight of at least one hour duration with a flight instructor or pass a proficiency check or skill test for any other class or type rating. *

(c) *Expired Ratings*

(i) If a type rating or multi-engine class rating has expired, the applicant must meet the requirements in sub-paragraph (a)(ii) and meet any refresher training requirements as determined by the CAA and the rating will be valid from the date of completion of the renewal requirements.

(ii) If a single-pilot single-engine class rating has expired, the applicant must complete the skill test in accordance with the requirements specified in Appendix 9 of Part-FCL. *

(2) Helicopter type ratings

(a) *Type ratings, helicopter – validity*

Type ratings for helicopters are valid for one year beginning with the date of issue, or the last day of the month in which the rating expired if revalidated within the period of three months preceding that day. *

(b) *Type ratings, helicopter – revalidation*

For revalidation of type ratings, helicopter, the applicant must complete the requirements specified in paragraph FCL.740H of Part-FCL.

* SI 2012/1751

(c) *Expired ratings*

If a type rating has expired, the applicant must meet the requirements in sub-paragraph (b) and meet any refresher training requirements as determined by the CAA and the rating is valid for a period beginning with the date of completion of the renewal requirements.

(3) Flight engineer type ratings

(a) *Type ratings – validity*

Flight engineer type ratings are valid for one year beginning with the date of issue, or the last day of the month in which the rating expired if revalidated within the period of three months preceding that day.

(b) *Type ratings – revalidation*

For revalidation of flight engineer type ratings the applicant must, within the three months preceding the expiry date of the rating, pass a proficiency check with an authorised examiner on the relevant type of aircraft.

* **Instrument ratings**

9A Instrument ratings

(a) *Validity periods*

Instrument ratings are valid from the date of issue, revalidation or renewal to the end of the month in which they were issued, revalidated or renewed, plus one year after that date in each case.

(b) *Revalidation and renewal of expired ratings*

(i) Instrument rating – aeroplane

For revalidation of instrument ratings (aeroplane) the applicant must complete the requirements specified in paragraph FCL.625.A of Part-FCL.

(ii) Instrument rating – helicopter

For revalidation of instrument ratings (helicopter) the applicant must complete the requirements specified in paragraph FCL.625.H of Part-FCL

(c) *Expired instrument ratings*

If the instrument rating has expired the applicant must complete the renewal requirements specified in paragraphs FCL.625(c) and FCL.625(d) of Part-FCL.

Instructor ratings

9B Instructor ratings

(a) *Validity periods*

Instructor ratings are valid from the date of issue, revalidation or renewal to the end of the month in which they were issued, revalidated or renewed, plus three years after that date in each case.

(b) *Revalidation and renewal of expired ratings*

In the following table, for an instructor rating listed in column 1 the requirements for revalidation are those set out in column 2 and for expired ratings the renewal requirements are those set out in column 3.

* SI 2012/1751

*

Rating	*Revalidation requirement (Part-FCL)*	*Renewal requirement (Part-FCL)*
Flight instructor (aeroplane)	FCL.940.FI(a) and (b)	FCL.940.FI(c)
Flying instructor's rating (aeroplanes)	FCL.940.FI(a) and (b)	FCL.940.FI(c)
Assistant flying instructor's rating (aeroplanes)	FCL.940.FI(a) and (b)	FCL.940.FI(c)
Flight instructor rating (helicopter)	FCL.940.FI(a) and (b)	FCL.940.FI(c)
Flying instructor's rating (helicopters)	FCL.940.FI(a) and (b)	FCL.940.FI(c)
Assistant flying instructor's rating (helicopters)	FCL.940.FI(a) and (b)	FCL.940.FI(c)
Type rating instructor's rating (multi-pilot aeroplane)	FCL.940.TRI(a)	FCL.940.TRI(b)
Type rating instructor's rating (helicopter)	FCL.940.TRI(a)	FCL.940.TRI(b)
Class rating instructor rating (single pilot aeroplane)	FCL.940.CRI(a) and (b)	FCL.940.CRI(c)
Instrument rating instructor rating (aeroplane)	FCL.940.IRI	FCL.940.IRI
Instrument rating instructor rating (helicopter)	FCL.940.IRI	FCL.940.IRI

Forms of certificate of revalidation

10 (1) A certificate of revalidation required by article 65(2), 66(2) or 68 must be signed by a person authorised by the CAA to sign certificates of this kind and certify:

(a) the functions to which the certificate relates;

(b) that the person signing the certificate is satisfied that on a date specified in the certificate, the holder of the licence of which the certificate forms a part met the appropriate requirements for revalidation specified for the rating, in the case of an aircraft rating in paragraph 9, in the case of an instrument rating in paragraph 9A and in the case of any other rating in the Table in paragraph 9B to exercise the privileges of the licence or rating to which the certificate relates;

*

(c) the type of aircraft or flight simulator in or by means of which the test was conducted; and

(d) the date on which it was signed.

Section 3 – Requirement for a Certificate of Revalidation to maintain the validity of a rating specified in Sections 2 and 3 of Part B

*

11 (1) A certificate of revalidation required by article 69(1) for a SSEA class rating, a microlight class rating or a SLMG class rating must be signed by a person authorised by the CAA to sign certificates of this kind and certify:

(a) the rating to which the certificate relates;

(b) that on a specified date the holder has satisfied the relevant requirements for issue in accordance with Table 1 and Table 2;

(c) the specified date; and

* SI 2012/1751

(d) the date on which the period of validity of the certificate expires in accordance with Table 3.

(2) In the case of a certificate of revalidation for a class rating which is being issued on the basis of paragraph 1(b) of Table 2, so that the holder of the licence has satisfied the experience requirements but without having had a flight with an instructor as part of that experience, the person signing the certificate must endorse the certificate "single seat only".

* (3) The new certificate is valid for 24 months in addition to the remainder of the month in which the date of issue falls.

Table 1 Requirements for issue of a certificate of revalidation for an aeroplane class rating included in Section 2 of Part B

	Circumstances	**Description of Flight**
1	On initial issue by the CAA	The holder of the licence has passed a NPPL General Skill Test with the authorised examiner signing the licence application form in an aeroplane of the class for which the certificate of revalidation is sought
2	There is a current valid certificate of revalidation for the rating	The holder of the licence has: (a) passed a NPPL General Skill Test with the authorised examiner signing the certificate in an aeroplane of the class for which the certificate of revalidation is sought; or (b) produced their personal flying log book to the authorised person signing the certificate and satisfied the authorised person that the holder satisfied the experience requirements specified in Table 2
3	The last previous certificate of revalidation for the rating expired less than five years before the date on which the new certificate is to be signed	The holder of the licence has passed a NPPL General Skill Test with the authorised examiner signing the certificate in an aeroplane of the class for which the certificate of revalidation is sought
4	The last previous certificate of revalidation for the rating expired five years or more before the date on which the new certificate is to be signed	The holder of the licence has passed: (a) a NPPL General Skill Test with the authorised examiner signing the certificate in an aeroplane of the class for which the certificate of revalidation is sought; and (b) an oral theoretical knowledge examination conducted by the authorised examiner as part of the NPPL General Skill Test

* SI 2012/1751

Table 2 Experience requirements for issue of certificate of revalidation in accordance with paragraph 2(b) of Table 1

	Circumstances	Experience requirements
1	Where one aeroplane class rating is held	(a) The holder has, as a pilot, in an aeroplane specified in the aeroplane class rating and within the period of validity of the current certificate of revalidation for the rating: (i) flown at least 12 hours which includes at least 8 hours as pilot in command; (ii) completed at least 12 take-offs and 12 landings; (iii) subject to sub-paragraph (b), undertaken at least one hour of flying training with an instructor entitled to give instruction on aeroplanes of that class; and (iv) flown at least six hours in the 12 months preceding the specified date (b) If the holder has not undertaken the flying training specified in paragraph 1(a)(iii) a certificate of revalidation may be issued but must be endorsed "single seat only".
2	Where two or three aeroplane class ratings are held	(a) The holder has, as a pilot, within the period of validity of the current certificate of revalidation for each rating: (i) flown a total of at least 12 hours in an aeroplane coming within any of the aeroplane class ratings which are held which includes at least a total of eight hours as pilot in command; (ii) completed not less than 12 take-offs and 12 landings in an aeroplane coming within any of the aeroplane class ratings which are held; (iii) subject to sub-paragraph (b), in an aeroplane coming within each of the aeroplane class ratings which are to be revalidated, either: (aa) flown at least one hour as pilot in command; or (bb) undertaken at least one hour of flying training with an instructor entitled to give instruction on aeroplanes of that class; (iv) subject to sub-paragraph (b), undertaken at least one hour of flying training in aeroplanes coming within any of the aeroplane class ratings which are held, with instructors entitled to give instruction on aeroplanes of those classes; and (v) flown at least six hours in the 12 months preceding the specified date in an aeroplane coming within any of the aeroplane class ratings which are held. (b) If the holder has flown at least one hour as pilot in command as specified in paragraph 2(a)(iii)(aa) but has not undertaken the flying training specified in paragraph 2(a)(iv) a certificate of revalidation may be issued but must be endorsed "single seat only".

* SI 2012/1751

* **Table 3 deleted**.

12 (1) A certificate of revalidation required by article 69(1) for a flying instructor's rating (SLMG), a flying instructor's rating (microlight), or an assistant flying instructor's rating (microlight) must be signed by a person authorised by the CAA to sign certificates of this kind and certify:

(a) the rating to which the certificate relates;

(b) that on a specified date the holder has passed an appropriate test of the holder's ability to exercise the privileges of the rating;

(c) the specified date; and

(d) the date on which the period of validity of the certificate expires in accordance with Table 4.

(2) Such a certificate of revalidation remains valid in accordance with Table 4.

Table 4 Period of validity of certificate of revalidation for a flying instructor's rating included in Section 2 of Part B

	Circumstances	**Period of validity for a certificate of revalidation for a flying instructor's rating (microlight and/or SLMG)**	**Period of validity for a certificate of revalidation for an assistant flying instructor's rating (microlight)**
	Whether or not a previous certificate is valid on the specified date of the instructor flight and ground test	The new certificate is valid for 25 months from the date of test	The new certificate is valid for 13 months from the date of test

* **13** (1) A certificate of revalidation required by article 69(1) for a helicopter type rating must be signed by a person authorised by the CAA to sign certificates of this kind and certify:

(a) the rating to which the certificate relates;

(b) that on a specified date the holder has satisfied the requirements of FCL.740 and FCL.740.H of Part-FCL;

(c) the specified date; and

(d) the date on which the period of validity of the certificate expires in accordance with paragraph (2).

(2) The new certificate is valid for 12 months in addition to the remainder of the month in which the date of issue falls.

* SI 2012/1751

INTENTIONALLY LEFT BLANK

SCHEDULE 8 **Articles 83(5), 85(4), 95(2) and 95(3)**

Public transport – operational requirements

PART A – Information and instructions which must be included in an operations manual

1 Information and instructions relating to the following matters must be included in an operations manual:

(a) The number of the crew to be carried in the aircraft, on each stage of any route to be flown.

(b) The respective capacities in which the crew members are to act.

(c) Instructions as to the order and circumstances in which command is to be assumed by members of the crew.

(d) The respective duties of each member of the crew and the other members of the operating staff.

(e) The scheme referred to in article 145(1).

(f) Such technical detailed information concerning the aircraft, its engines and equipment and concerning the performance of the aircraft as may be necessary to enable the flight crew of the aircraft to perform their respective duties.

(g) (i) The manner in which the quantities of fuel and oil to be carried by the aircraft are to be computed and records of fuel and oil carried and consumed on each stage of the route to be flown are to be maintained.

(i) The instructions must take account of all circumstances likely to be encountered on the flight including the possibility of failure of one or more of the aircraft engines.

(h) The manner in which the quantity, if any, of oxygen and oxygen equipment to be carried in the aircraft for the purpose of complying with Scale L1 or L2 in Schedule 4 is to be computed.

(i) The check system to be followed by the crew of the aircraft before and on take-off, on landing and in an emergency, so as to ensure that the operating procedures contained in the operations manual and in the flight manual or performance schedule for the aircraft are complied with.

(j) The circumstances in which a radio watch is to be maintained.

(k) The circumstances in which oxygen is to be used by the crew of the aircraft, and by passengers.

(l) (i) Subject to paragraph 2, communication, navigational aids, aerodromes, local regulations, in-flight procedures, approach and landing procedures and such other information as the operator considers necessary for the proper conduct of flight operations.

(ii) The information referred to in sub-paragraph (i) must be contained in a route guide, which may be in the form of a separate volume.

(m) The reporting in flight to the notified authorities of meteorological observations.

(n) (i) Subject to paragraph 2, the minimum altitudes for safe flight on each stages of the route to be flown and any planned diversion from that route.

(iii) The minimum altitudes must not be lower than any which may be applicable under the law of the United Kingdom or of the countries whose territory is to be flown over.

(o) The required information referred to in article 107(2).

(p) Emergency flight procedures, including procedures for the instruction of passengers in the position and use of emergency equipment and procedures to be adopted when the commander of the aircraft becomes aware that another aircraft or a vessel is in distress and needs assistance.

(q) In the case of aircraft intended to fly at an altitude of more than 49,000 ft the procedures for the use of cosmic radiation detection equipment.

(r) The labelling and marking of dangerous goods, the manner in which the dangerous goods must be loaded on or suspended beneath an aircraft, the responsibilities of members of the crew for the carriage of dangerous goods and the action to be taken in the event of emergencies arising involving dangerous goods.

(s) Such detailed information about any permission granted to the operator under article 41(3) as may be necessary to enable the commander of the aircraft to determine whether article 86(3)(b)(ii) can be complied with.

(t) Procedures for the operation of any airborne collision avoidance system carried on the aircraft.

(u) The establishment and maintenance of an accident prevention and flight safety programme.

(v) In the case of a helicopter, the maximum approved passenger seating configuration.

2 In relation to any flight which is not one of a series of flights between the same two places and to the extent that it is not practicable to comply with sub-paragraphs 1(l) and 1(n), it is sufficient if the manual contains such information and instructions as will enable the equivalent data to be ascertained before take-off.

PART B – Information and instructions which must be included in a training manual

1 The following information and instructions must be included in a training manual:

(a) The manner in which the training, practice and periodical tests required under article 95(2) and specified in Part C of this Schedule are to be carried out.

(b) The minimum qualifications and experience which an operator requires of persons appointed by the operator to give or to supervise the training, practice and periodical tests.

(c) The type of training, practice and periodical tests which each such person is appointed to give or to supervise.

(d) The type of aircraft for which each such person is appointed to give or to supervise the said training, practice and periodical tests.

(e) The minimum qualifications and experience required for each member of the crew undergoing the required training, practice and periodical tests.

(f) The current syllabus for, and specimen forms for recording, the required training, practice and periodical tests.

(g) The manner in which instrument flight conditions and engine failure are to be simulated in the aircraft in flight.

(h) The extent to which the required training and testing is permitted in the course of flights for the purpose of public transport.

(i) The use to be made in the required training and testing of apparatus approved for the purpose by the CAA.

PART C – Required crew training, experience, practice and periodical tests

Crew

1 The training, experience, practice and periodical tests required under article 95(2) for members of the crew of an aircraft to which that paragraph applies must be as follows:

(a) Every member of the crew must have been tested by or on behalf of the operator within the relevant period as to the crew member's knowledge of the use of the emergency and life saving equipment required to be carried in the aircraft on the flight.

(b) Every member of the crew must have practised under the supervision of the operator or of a person appointed by the operator for the purpose, within the relevant period, the carrying out of the duties required of the crew member in case of an emergency occurring to the aircraft:

(i) in an aircraft of the type to be used on the flight; or

(ii) in apparatus approved by the CAA for the purpose and controlled by a person so approved by the CAA.

Pilots

2 (1) Every pilot included in the flight crew who is intended by the operator to fly as pilot in circumstances requiring compliance with the Instrument Flight Rules must have been tested by or on behalf of the operator within the relevant period:

(a) as to the pilot's competence to perform the pilot's duties while executing normal manoeuvres and procedures in flight; and

(b) as to the pilot's competence to perform the pilot's duties in instrument flight conditions while executing emergency manoeuvres and procedures in flight,

in each case in an aircraft of the type to be used on the flight and including the use of the instruments and equipment provided in the aircraft.

(2) A pilot's ability to execute normal manoeuvres and procedures must be tested in the aircraft in flight.

(3) The other tests required by sub-paragraph (1) may be conducted either in the aircraft in flight, or under the supervision of a person approved by the CAA for the purpose by means of a flight simulator approved by the CAA.

(4) The tests specified in sub-paragraph (1)(b) when conducted in the aircraft in flight must be carried out either in actual instrument flight conditions or in instrument flight conditions simulated by means approved by the CAA.

(5) Every pilot included in the flight crew whose licence does not include an instrument rating or who is not intended by the operator to fly in circumstances requiring compliance with the Instrument Flight Rules, even though the licence includes such a rating, must have been tested within the relevant period, by or on behalf of the operator in flight in an aircraft of the type to be used on the flight:

(a) as to the pilot's competence to act as pilot of that aircraft, while executing normal manoeuvres and procedures; and

(b) as to the pilot's competence to act as pilot of that aircraft while executing emergency manoeuvres and procedures.

(6) (a) This sub-paragraph (6) applies to every pilot included in the flight crew who is seated at the flying controls during the take-off or landing and who is intended by the operator to fly as pilot in circumstances requiring compliance with the Instrument Flight Rules.

(c) Every pilot to whom this sub-paragraph applies must have been tested within the relevant period as to the pilot's proficiency in using instrument approach-to-land systems of the type in use at the aerodrome of intended landing and any alternate aerodromes.

(d) The test required by sub-paragraph (b) must be carried out:

(i) in flight in instrument flight conditions; or

(ii) in instrument flight conditions simulated by means approved by the CAA; or

(iii) under the supervision of a person approved by the CAA for the purpose by means of a flight simulator approved by the CAA.

(7) In the case of a helicopter, every pilot included in the flight crew whose licence does not include an instrument rating but who is intended to fly at night under visual flight conditions, must have been tested within the relevant period by or on behalf of the operator, in a helicopter of the type to be used on the flight, as to the pilot's competence to act as pilot of that helicopter:

(a) while executing normal manoeuvres and procedures; and

(b) while executing specified manoeuvres and procedures in flight in instrument flight conditions simulated by means approved by the CAA.

(8) Every pilot included in the flight crew and who is seated at the flying controls during take-off or landing must have carried out within the relevant period, at least three take-offs and three landings in aircraft of the type to be used on the flight when seated at the flying controls.

Flight engineers

3 (1) Every flight engineer included in the flight crew must have been tested by or on behalf of the operator within the relevant period:

(a) as to the engineer's competence to perform the engineer's duties while executing normal procedures in flight, in an aircraft of the type to be used on the flight; and

(b) as to the engineer's competence to perform the engineer's duties while executing emergency procedures in flight, in an aircraft of the type to be used on the flight.

(2) A flight engineer's ability to carry out normal procedures must be tested in an aircraft in flight and the other tests required by this paragraph may be conducted:

(a) in the aircraft in flight; or

(b) under the supervision of a person approved by the CAA for the purpose by means of a flight simulator approved by the CAA.

Flight radiotelephony operators and flight navigators

4 Every flight radiotelephony operator and flight navigator whose inclusion in the flight crew is required under articles 43(5) and 47(1)(a) respectively must have been tested by or on behalf of the operator within the relevant period as to their competence to perform their duties in conditions corresponding to those likely to be encountered on the flight:

(a) in the case of a flight radiotelephony operator using radio equipment of the type installed in the aircraft to be used on the flight, and including a test of the operator's ability to carry out emergency procedures; and

(b) in the case of a flight navigator, using equipment of the type to be used in the aircraft on the flight for purposes of navigation.

Aircraft commanders

5 (1) The pilot designated as commander of the aircraft for the flight must have demonstrated to the satisfaction of the operator within the relevant period that the pilot has adequate knowledge of the route to be taken, the aerodromes of take-off and landing, and any alternate aerodromes, including in particular the pilot's knowledge of the following which are relevant to the route:

(a) the terrain;

(b) the seasonal meteorological conditions;

(c) the meteorological, communications and air traffic facilities, services and procedures;

(d) the search and rescue procedures; and

(e) the navigational facilities.

(2) In determining whether a pilot's knowledge of the matters referred to in sub-paragraph (1) is sufficient to render the pilot competent to perform the duties of aircraft commander on the flight, the operator must take into account the pilot's flying experience in conjunction with the following:

(a) the experience of other members of the intended flight crew;

(b) the influence of terrain and obstructions on departure and approach procedures at the aerodromes of take-off and intended landing and at alternate aerodromes;

(c) the similarity of the instrument approach procedures and let-down aids to those with which the pilot is familiar;

(d) the dimensions of runways which may be used in the course of the flight in relation to the performance limits of aircraft of the type to be used on the flight;

(e) the reliability of meteorological forecasts and the probability of difficult meteorological conditions in the areas to be traversed;

(f) the adequacy of the information available regarding the aerodrome of intended landing and any alternate aerodromes;

(g) the nature of air traffic control procedures and the familiarity of the pilot with such procedures;

(h) the influence of terrain on route conditions and the extent of the assistance obtainable en route from navigational aids and air-to-ground communication facilities; and

(i) the extent to which it is possible for the pilot to become familiar with unusual aerodrome procedures and features of the route by means of ground instruction and training devices.

Deemed compliance

6 (1) For the purposes of paragraph 2(1), 2(5) or 3(1) a pilot or flight engineer is deemed to have complied with the specified requirements in paragraphs 2(1)(b), 2(5)(b) or 3(1)(b) within the relevant period if:

(a) they have qualified in accordance with the specified requirements on at least two occasions within the period of 13 months immediately preceding the flight; and

(b) such occasions are separated by an interval of not less than four months.

(2) For the purposes of paragraph 5(1) a pilot is deemed to have complied with the specified requirements if, having become qualified to act as commander on flights between the same places over the same route more than 13 months before commencement of the flight, the pilot has within the period of 13 months immediately preceding the flight flown as pilot of an aircraft between those places over that route.

Contents of records

7 The records required to be maintained by an operator under article 95(3) must be accurate and up-to-date records kept so as to show, on any date, in relation to each person who has during the period of two years immediately preceding that date flown as a member of the crew of any public transport aircraft operated by that operator:

(a) the date and detailed information about each test required by this Part and undergone by that person during the period, including the name and qualifications of the examiner;

(b) the date on which that person last practised the carrying out of duties referred to in paragraph 1(2);

(c) the operator's conclusions, based on each such test and practice as to that person's competence to perform that person's duties; and

(d) the date and detailed information about any decision taken by the operator during the period in accordance with paragraph 5(1), including detailed information about the evidence on which that decision was based.

Production of records to authorised person

8 The operator must, whenever called on to do so by any authorised person:

(a) produce for the inspection of any such person all records referred to in paragraph 7;

(b) supply to any such person all such information that person may require in connection with any such records; and

(c) produce for inspection by any such person all log books, certificates, papers and other documents, whatsoever which may reasonably be required to be seen for the purpose of determining whether such records are complete or of verifying the accuracy of their contents.

Supply of records to crew member

9 At the request of any person for whom the operator is required to keep records under this Part, the operator must supply to that person, or to any other operator of aircraft for the purpose of commercial air transport or public transport by whom that person may subsequently be employed, detailed information about any qualifications in accordance with this Schedule obtained by such person whilst in the operator's service.

Definitions and validity periods

10 For the purposes of this Part:

(a) 'visual flight conditions' means weather conditions such that the pilot is able to fly by visual reference to objects outside the aircraft;

(b) 'instrument flight conditions' means weather conditions such that the pilot is unable to fly by visual reference to objects outside the aircraft;

(c) 'relevant period' means a period which immediately precedes the commencement of the flight, being, subject to paragraph 6, a period:

(i) in the case of paragraph 2(8), of three months;

(ii) in the case of paragraphs 2(1)(b), 2(5)(b), 2(6)(b), 2(7)(b) and 3(1)(b), of six months; and

(iii) in the case of paragraphs 1, 2(1)(a), 2(5)(a), 2(7)(a), 3(1)(a), 4 and 5(1), of 13 months.

SCHEDULE 9 **Articles 150(2) and 156(3)**

DOCUMENTS TO BE CARRIED

Circumstances in which documents are to be carried

1 Subject to paragraph 3:

(a) on a public transport flight, Documents A, B, C, D, E, F, H and, if the flight is international air navigation, Documents G and I must be carried;

(b) on an aerial work flight, Documents A, B, C, E, F and, if the flight is international air navigation, Documents G and I must be carried;

(c) on a private flight which is international air navigation, Documents A, B, C, G and I must be carried;

(d) on a flight made in accordance with the terms of a permission granted to the operator under article 41(3), Document J must be carried.

Description of documents

2 For the purposes of this Schedule:

(a) 'Document A' means the licence in force under the Wireless Telegraphy Act 2006[(a)] for the aircraft radio station installed in the aircraft;

(b) 'Document B' means in the case of a non-EASA aircraft the national certificate of airworthiness in force for the aircraft[(b)];

(c) 'Document C' means the licences of the members of the flight crew of the aircraft;

(d) 'Document D' means one copy of the load sheet, if any, required by article 100 for the flight;

(e) 'Document E' means one copy of each certificate of maintenance review required by article 25(2), if any, in force for the aircraft;

(f) 'Document F' means the technical log, if any, in which entries are required to be made under article 27(2);

(g) 'Document G' means the certificate of registration in force for the aircraft;

(h) 'Document H' means those parts of the operations manual, if any, required by article 83(4)(c) to be carried on the flight;

(i) 'Document I' means a copy of the notified procedures to be followed by the pilot in command of an intercepted aircraft, and the notified visual signals for use by intercepting and intercepted aircraft;

(j) 'Document J' means the permission, if any, granted for the aircraft under article 41(3).

Exceptions

3 (1) If the certificate of airworthiness includes the flight manual for the aircraft and with the permission of the CAA, an aircraft to which article 83 applies need not carry the flight manual as part of Document B.

(a) 2006 c.36.

(b) An EASA aircraft is required by virtue of Part 21 to carry its certificate of airworthiness or restricted certificate of airworthiness during all flights.

(2) With the permission of the CAA, an aircraft to which article 83 applies need not carry Document J if it carries an operations manual which includes the detailed information specified at paragraph 1(s) of Part A of Schedule 8.

Definition

4 For the purposes of this Schedule, 'international air navigation' means any flight which includes passage over the territory of any country other than the United Kingdom, but does not include passage over any of the Channel Islands, the Isle of Man or any other relevant overseas territory to which there is power to extend the Civil Aviation Act 1982[(a)] under section 108(1) of that Act.

(a) 1982 c.16; section 108(1) was amended by the Airports Act 1986 c.31, section 83(1) and Schedule 4, paragraph 8(2).

SCHEDULE 9 **Articles 150(2) and 156(3)**

DOCUMENTS TO BE CARRIED

Circumstances in which documents are to be carried

1 Subject to paragraph 3:

(a) on a public transport flight, Documents A, B, C, D, E, F, H and, if the flight is international air navigation, Documents G and I must be carried;

(b) on an aerial work flight, Documents A, B, C, E, F and, if the flight is international air navigation, Documents G and I must be carried;

(c) on a private flight which is international air navigation, Documents A, B, C, G and I must be carried;

(d) on a flight made in accordance with the terms of a permission granted to the operator under article 41(3), Document J must be carried.

Description of documents

2 For the purposes of this Schedule:

(a) 'Document A' means the licence in force under the Wireless Telegraphy Act 2006[(a)] for the aircraft radio station installed in the aircraft;

(b) 'Document B' means in the case of a non-EASA aircraft the national certificate of airworthiness in force for the aircraft[(b)];

(c) 'Document C' means the licences of the members of the flight crew of the aircraft;

(d) 'Document D' means one copy of the load sheet, if any, required by article 100 for the flight;

(e) 'Document E' means one copy of each certificate of maintenance review required by article 25(2), if any, in force for the aircraft;

(f) 'Document F' means the technical log, if any, in which entries are required to be made under article 27(2);

(g) 'Document G' means the certificate of registration in force for the aircraft;

(h) 'Document H' means those parts of the operations manual, if any, required by article 83(4)(c) to be carried on the flight;

(i) 'Document I' means a copy of the notified procedures to be followed by the pilot in command of an intercepted aircraft, and the notified visual signals for use by intercepting and intercepted aircraft;

(j) 'Document J' means the permission, if any, granted for the aircraft under article 41(3).

Exceptions

3 (1) If the certificate of airworthiness includes the flight manual for the aircraft and with the permission of the CAA, an aircraft to which article 83 applies need not carry the flight manual as part of Document B.

(a) 2006 c.36.

(b) An EASA aircraft is required by virtue of Part 21 to carry its certificate of airworthiness or restricted certificate of airworthiness during all flights.

(2) With the permission of the CAA, an aircraft to which article 83 applies need not carry Document J if it carries an operations manual which includes the detailed information specified at paragraph 1(s) of Part A of Schedule 8.

Definition

4 For the purposes of this Schedule, 'international air navigation' means any flight which includes passage over the territory of any country other than the United Kingdom, but does not include passage over any of the Channel Islands, the Isle of Man or any other relevant overseas territory to which there is power to extend the Civil Aviation Act 1982[(a)] under section 108(1) of that Act.

(a) 1982 c.16; section 108(1) was amended by the Airports Act 1986 c.31, section 83(1) and Schedule 4, paragraph 8(2).

SCHEDULE 11 **Article 206**

AIR TRAFFIC SERVICE EQUIPMENT – RECORDS REQUIRED AND MATTERS TO WHICH THE CAA MAY HAVE REGARD

PART A – Records to be kept in accordance with article 206(1)(a)

1 A record of any functional tests, flight checks and detailed information about any maintenance, repair, overhaul, replacement or modification.

2 Subject to paragraph 3, the record must be kept in a legible or a non-legible form. If the record is kept in a non-legible form it must be capable of being reproduced in a legible form and it must be so reproduced by the person required to keep the record if requested by an authorised person.

3 In any particular case the CAA may direct that the record is kept or be capable of being reproduced in such a form as it may specify.

PART B – Records required in accordance with article 206(5)(b)

1 Each record made by the apparatus provided in compliance with article 206(2) or (3) must be adequately identified and in particular must include:

(k) the identification of the aeronautical radio station;

(l) the date or dates on which the record was made;

(m) a means of determining the time at which each message or signal was transmitted or received;

(n) the identity of the aircraft to or from which and the radio frequency on which the message or signal was transmitted or received; and

(o) the time at which the record started and finished.

PART C – Matters to which the CAA may have regard in granting an approval of apparatus in accordance with article 206(6)

1 The purpose for which the apparatus is to be used.

2 The manner in which the apparatus has been specified and produced in relation to the purpose for which it is to be used.

3 The adequacy, in relation to the purpose for which the apparatus is to be used, of the operating parameters of the apparatus (if any).

4 The manner in which the apparatus has been or will be operated, installed, modified, maintained, repaired and overhauled.

5 The manner in which the apparatus has been or will be inspected.

INTENTIONALLY LEFT BLANK

SCHEDULE 12 **Article 211(7)**

INFORMATION AND INSTRUCTIONS WHICH MUST BE INCLUDED IN AN AERODROME MANUAL

1 The name and status of the accountable manager having corporate authority for ensuring that all operations activities can be financed and carried out to the standard required.

2 The names and status of other senior aerodrome operating staff and instructions as to the order and circumstances in which they may be required to act.

3 Details of the safety management system.

4 The system of aeronautical information service available.

5 Procedures for promulgating information concerning the aerodrome's state.

6 Procedures for the control of access, vehicles and work in relation to the aerodrome manoeuvring area and apron.

7 Procedures for complying with article 226 and for the removal of disabled aircraft.

8 In the case of an aerodrome which has facilities for fuel storage, procedures for complying with article 217.

9 (1) Subject to sub-paragraph (2), plans to an appropriate scale which clearly depict the layout of runways, taxiways and aprons, aerodrome markings, aerodrome lighting if such lighting is provided, and the siting of any navigational aids within the runway strip.

(2) In the case of copies or extracts of the manual provided or made available to a member of the aerodrome operating staff, the plans must be of a scale reasonably appropriate for the purposes of article 211(9).

10 For an aerodrome in relation to which there is a notified instrument approach procedure, survey information sufficient to provide data for the production of aeronautical charts relating to that aerodrome.

11 Description, height and location of obstacles which infringe standard obstacle limitation surfaces, and whether they are lit.

12 Data for and method of calculation of declared distances and elevations at the beginning and end of each declared distance.

13 Method of calculating reduced declared distances and the procedure for their promulgation.

14 Details of surfaces and bearing strengths of runways, taxiways and aprons.

15 The system of the management of air traffic in the airspace associated with the aerodrome, including procedures for the co-ordination of traffic with adjacent aerodromes, except any such information or procedures already published in any manual of air traffic services.

16 Operational procedures for the routine and special inspection of the aerodrome manoeuvring area and aprons.

17 If operations are permitted during periods of low visibility, procedures for the protection of the runways during such periods.

18 Procedures for the safe integration of all aviation activities undertaken at the aerodrome.

19 Details of or reference to the bird control management plan.

20 Procedures for the use and inspection of the aeronautical ground lighting system, if such a system is provided.

21 The scale of rescue, first aid and fire service facilities, the aerodrome emergency procedures and procedures to be adopted in the event of temporary depletion of the rescue and fire service facilities.

SCHEDULE 13 Article 241

PENALTIES

PART A – PROVISIONS REFERRED TO IN ARTICLE 241(5)

Part A, Section 1

Article of Order	Subject Matter
5(3)	Unqualified person not to cause or permit aircraft to be used for commercial air transport, public transport or aerial work
6(6)	Aircraft to fly in accordance with conditions in aircraft dealer's certificate
7(1)	Certificate of registration to be returned
7(2)	Registered owner to inform the CAA of specified events
7(3)	Person who becomes the owner of aircraft registered in the United Kingdom must inform the CAA
23(4)	Requirement for placard
23(5)	Requirement to fly by day and in accordance with Visual Flight Rules
24(2)	Restriction on purposes of flight by aircraft with a certificate of validation
26(5)	Carriage and keeping of certificate of maintenance review
26(6)	Preservation of certificate of maintenance review
27(8)	Carriage and keeping of technical log
27(10)	Preservation of technical log
34(6)	Preservation of log books
35(5)	Preservation of weight schedule
75	Requirement for training for landing on or taking off from water
79	Requirement to keep personal flying log book
81	Minimum age for glider pilot
93(5)	Pilot to be secured in seat
93(6)	Operator not to permit helicopter rotor to be turned unless pilot at controls
94(1) and (2)	Requirements for accident prevention and flight safety programme
100(1)	Person supervising loading to prepare and sign load sheet and submit it for examination by commander
100(2)	Carriage and preservation of load sheet
101(1)	Carriage of baggage
111(1)	Requirement to wear a survival suit
127	Self-sustaining glider not to take off under its own power
150(1), (2) and (4)	Documents to be carried
156(1), (2), (4) and (5)	Production of documents and records
157	Production of air traffic service equipment documents and records
159	Preservation of documents
160(5)	Requirement to inform CAA of departure from Rules of the Air
*	
192	Incapacity of air traffic controllers

* SI 2012/1751

Part A, Section 1 (Continued)

Article of Order	Subject Matter
195	Not to act as air traffic controller or student air traffic controller where exam etc failed
** 198	Certification of training organisations
199	Requirement for certified training organisation to produce records
204A	Unauthorised operation of aeronautical radio station
205(3)	Requirement to notify aeronautical radio station service
206(1)	Requirement to keep air traffic service equipment records
206(4)	Capability of recording apparatus
206(5)	Operation of recording apparatus
206(8) and (9)	Requirements where apparatus ceases to be capable of recording or becomes unserviceable
206(10) to (12)	Air traffic service equipment records
211(3)	Requirement to supply information
212(4)	Requirement for holder of public use licence to notify
213	Requirement for holder of public use licence to supply information to Secretary of State
214	Requirement to make air navigation facilities available
* 214A(3)	Obstructions of or interference with aerodrome firefighters
224(1)	Filing and approval of tariffs
228(3)	Requirement to surrender document to CAA
230(7)	Requirement to surrender permit to Secretary of State

Part A, Section 2

Provisions of Part 21, M, 145, 66 or 147	Subject Matter
21A.61	Instructions for the continued airworthiness by the holder of type certificate or restricted type certificate
21A.107	Variations to instructions for continued airworthiness by the holder of a minor change approval to type design
21A.120	Instructions for continued airworthiness by supplemental type certificate holder
21A.130	Requirement for statement of conformity
21A.147	Approval of changes to the approved production organisation
21A.180	Inspections to be permitted by holder of airworthiness certificate
21A.439	Production of repair parts
21A.441	Repair embodiment
21A.449	Instructions for continued airworthiness by holder of repair design approval
21A.721	Inspections to be allowed by holder of, or applicant for, a permit to fly
21A.729	Record keeping by the holder of the approval of the flight conditions
21A.805	Identification of critical parts

* SI 2010/770
** SI 2012/1751

Part A, Section 2 (Continued)

Provisions of Part 21, M, 145, 66 or 147	Subject Matter
M.A.307	Transfer of aircraft continuing airworthiness records
M.A.401	Use of current maintenance data
M.A.402	Performance of maintenance
M.A.501	Installation of components
M.A.502	Component maintenance
M.A.504(b), (c) and (d)	Control of unserviceable components
M.A.611	Maintenance standards
M.A.614	Maintenance records to be kept by approved maintenance organisation
M.A.617	Notification of changes to the approved maintenance organisation
M.A.713	Notification of changes to the approved continuing airworthiness organisation
M.A.714	Record keeping by continuing airworthiness management organisation
M.A.902(c)	Airworthiness review certificate to be returned
145.A.85	Notification of changes to the organisation
147.A.110	Records of instructors, examiners and assessors
147.A.125	Records
147.A.150	Notification of changes to the maintenance training organisation

Part A, Section 3

Provision of EU-OPS	Subject Matter
1.037	Accident prevention and flight safety programme
1.110	Use of Portable Electronic Devices
1.125	Documents to be carried
1.130	Manuals to be carried
1.135(a)	Additional information and forms to be carried
1.140	Information to be retained on the ground
1.150	Production of documentation and records
1.155	Preservation of documentation
1.165(b) and (c)	Leasing requirements
1.205	Competence of operations personnel
1.220	Authorisation of aerodromes by operator
1.230	Use of instrument departure and approach procedures
1.295	Selection of aerodromes
1.300	Submission of ATS flight plan
1.335	Smoking on board
1.340	Meteorological conditions
1.345(b)	Commander not to take off unless external surfaces are clear
1.350	Fuel and oil supply

Part A, Section 3 (Continued)

Provision of EU-OPS	Subject Matter
1.355	Take-off conditions
1.360	Commander to be satisfied as to take off minima
1.385	Use of supplemental oxygen
1.400	Approach and landing conditions
1.405(a), (d) and (e)	Commencement and continuation of approach
1.415	Requirement for journey log
1.420(b), (c) and (d)	Occurrence reporting
1.440	Low visibility operations – general operating roles
1.445	Low visibility operations – aerodrome considerations
1.450	Low visibility operations – training and qualifications
1.455	Low visibility operations – operating procedures
1.460	Low visibility operations – minimum equipment
1.465	VFR operating minima
1.615	Mass values for crew
1.620	Mass values for passengers and baggage
1.985	Training records for flight crew
1.1035	Training records for cabin crew
1.1105	Maximum daily flight duty period
1.1110	Rest requirements
1.1135	Flight duty, duty and rest period records

* **Part A, Section 4**

Provision of Part-FCL	Subject Matter
ORA.GEN.130	Changes to organisations
ORA.ATO.120	Record keeping

PART B – PROVISIONS REFERRED TO IN ARTICLE 241(6)

Part B, Section 1

Article of Order	Subject Matter
3(1)	Aircraft to be registered
10(1)	Aircraft not to fly unless it has nationality and registration marks
10(3)	Aircraft not to bear misleading marks
15(1)	Compliance with operational directives
20(1)	Compliance with airworthiness directives
23(1)	Restrictions on purposes of flight by aircraft with national permit to fly
23(2)	Restrictions of carriage of persons by aircraft with national permit to fly
25(1)	Requirement to be maintained in accordance with approved maintenance schedule

* SI 2012/1751

Part B, Section 1 (Continued)

Article of Order	Subject Matter
25(2)	Maintenance review requirements
27(2)	Requirement for technical log
27(4)	Entries in technical log
27(7)	Certificate to be entered in technical log
28(2)	Requirement for certificate of release to service for non-EASA aircraft
32	Requirement for certificate of release to service for EASA aircraft
33(7)	Holder of maintenance licence not to exercise privileges when unfit
34(1), (2), (3) and (5)	Requirements for log books for non-EASA aircraft
35(3)	Requirement for weighing and determining centre of gravity
35(4)	Requirement for weight schedule
* 36A	Aircraft not to fly without valid national airworthiness review certificate
36C	Aircraft not to fly in specified circumstances
37(1), (2), (3), (8) and (9)	Requirements for aircraft to carry equipment
38	Carriage and use of equipment
39(1), (2) (7), (8) and (9)	Requirements for aircraft to carry radio communication and radio navigation equipment
40	Carriage of notified radio communication and radio navigation equipment
41(4)	Carriage of minimum equipment
42	Required flight crew
43(3)	Flight crew required by aircraft registered in the United Kingdom
44	Pilots required on public transport flights by flying machines
45(1)	Pilots required on public transport flights by aeroplanes
46(1)	Pilots required on public transport flights by helicopters
47	Flight navigators or navigational equipment required on public transport flights
48(2) and (3)	Requirement to carry cabin crew
49(1)	Compliance with direction to carry additional crew
63(2) and (3)	Holder of licence which does not meet minimum standards of Chicago Convention to obtain permission of competent authority and not to fly in the United Kingdom without permission of the CAA
74(1)	Person not to act as member of flight crew when unfit
74(2)	Requirement to inform CAA of injury, illness or pregnancy
80(2)	Requirements for giving of flying instruction
83	Operations manual requirements
84	Police operations manual requirements
85	Training manual requirements
86(2)	Pre-flight action by commander of aircraft
87	Commander to be satisfied that flight can be safely completed
88	Passenger briefing by commander
89	Commander to ensure demonstration of flight jackets

* SI 2012/1751

Part B, Section 1 (Continued)

Article of Order	Subject Matter
90	Commander to ensure crew, passengers and baggage secure
91	Commander to ensure demonstration of use of oxygen on public transport flights
92	Commander to demonstrate use of oxygen on aerial work and private flights
93(2), (3) and (4)	Pilots to remain at controls
95	Operator's responsibilities in relation to crew
96	Operator's responsibilities in relation to routes and aerodromes
97	Prohibition on public transport and commercial air transport flights at night and in specified meteorological conditions by aeroplane with one power unit registered elsewhere than in the United Kingdom
98	Operator's duty concerning loading of public transport aircraft
103(1)	Requirement to comply with subpart F of EU-OPS
103(6) and (9)	Requirements for aeroplanes flying over water for public transport
104(2)	Public transport operating conditions and performance requirements for helicopters
104(6)	Requirements for helicopter on public transport flights flying over water
105	Requirements for helicopters carrying out a performance class 3 operation
106(1)(a)	Helicopter flying over water for public transport under national air operator's certificate on performance class 1 or class 2 operation
106(1)(b)	Helicopter flying over water under police air operator's certificate on a performance class 1 or class 2 operation
107	Aerodrome operating minima requirements for public transport aircraft registered in United Kingdom
108	Aerodrome operating minima requirements for public transport aircraft registered elsewhere than in United Kingdom
109	Aerodrome operating minima requirements for aerial work and private aircraft
110	Commander to be satisfied that additional survival equipment carried
112	Operation of radio in aircraft
113	Requirement for operation of airborne collision avoidance system
114	Requirements for training in operation of airborne collision avoidance system
115	Vibration health monitoring system to be operated in accordance with approved procedures
116	Person not to be in specified parts of aircraft in flight or object towed or attached
117(2)	Exits to be in working order
117(3)	Exits to be kept free of obstruction
118(2)	Operator to ensure marking of exits
119(2)	Operator to ensure marking of break-in areas
121	Requirements concerning equipment when flying in North Atlantic Minimum Navigation Performance Specification airspace
122	Requirements concerning equipment when aircraft registered in United Kingdom flying in Reduced Vertical Separation Minimum airspace

Part B, Section 1 (Continued)

Article of Order	Subject Matter
123	Requirements concerning equipment when aircraft registered elsewhere than in United Kingdom flying in United Kingdom Reduced Vertical Separation Minimum airspace
124	Requirements concerning equipment for aircraft registered in the United Kingdom flying in Required Navigation Performance airspace
125	Requirements concerning equipment for aircraft registered elsewhere than in the United Kingdom flying in United Kingdom Required Navigation Performance airspace
126	Towing of gliders
128	Towing and picking up persons and articles other than gliders
129	Dropping of articles and animals
130(1) and (4) to (8)	Requirements for parachuting
130(2)	Person not to be dropped so as to endanger persons or property
131(1) and (4) to (7)	Requirements for aerial application
140	Smoking in aircraft
141	Requirement to comply with lawful commands of commander of aircraft
142(a) & (b)	Acting in a disruptive manner
143	Stowaways
145(3)	Operator's obligation to obtain flight time records of flight crew
146(2)	Flight crew member's obligation to inform operator of flight times
147	Flight times – responsibilities of flight crew
152	Use of flight recording systems
153	Preservation of records of aeroplane flight data recorder
154	Preservation of records of helicopter flight data recorder
155	Preservation of records of helicopter cockpit voice recorder/flight data recorder
160(2)	Requirement to comply with Rules of the Air
161(4)	Requirement to comply with Restriction of Flying Regulations
161(5)	Requirement to leave restricted area
161(6)	Requirement to comply with instructions in restricted area or danger area
162(1) to (5) and (17)	Requirements for flying displays
163	Requirements for balloons
164	Requirements for gliders, kites and parascending parachutes
165	Requirements for airships
166	Requirements for small unmanned aircraft
167	Requirements for small unmanned surveillance aircraft
168	Requirements for rockets
170	Duty of person in charge to be satisfied as to competence of controllers
171	Requirement for Manual of Air Traffic Services
172	Requirement to provide air traffic services
173(5)	Requirement to comply with air traffic direction
173(7)	Requirement to comply with provisional air traffic direction

Part B, Section 1 (Continued)

Article of Order	Subject Matter
174(4)	Requirement to comply with direction for airspace policy purposes
175	Use of radio callsigns at aerodromes
202(1)(a)	Requirement for flight information service officer's licence
202(1)(b)	Requirement to identify as flight information service officer
204	Requirement for flight information service manual
205(1)	Requirement for approval for air traffic service equipment
206(2)	Provision of recording apparatus
207	Requirement to use licensed or Government aerodrome
* 208A(1)	Aerodrome operator permitting flying training or testing at aerodrome without adequate facilities
* 208A(2)	Commander conducting flying training or testing at aerodrome without adequate facilities
209	Lighting for helicopters flying for public transport at night
211(4)	Requirement to comply with aerodrome licence conditions
211(5)	Requirement to take reasonable steps to secure airspace safe for use by aircraft
211(7) to (10)	Requirements for aerodrome manual
217(1) and (2)	Obligations of person having management of fuel installation on an aerodrome
217(4) and (5)	Requirements to keep and produce records for fuel installation
218(1) and (3)	Requirements for aeronautical lights
219(2) to (5)	Requirements for lighting of en-route obstacles
220(2), (4) to (7) and (9)	Requirements for lighting of wind turbine generators in United Kingdom territorial waters
221(1) and (2)	Lights liable to endanger not to be exhibited
222	Lights which dazzle or distract not to be shone
227	Requirements to report bird strikes
237	Compliance with direction to make data available
239	Person not to obstruct or impede

Part B, Section 2

Provision of Part 21, M, 145, 66 or 147	Subject Matter
21A.3(b) and (c)	Reporting of investigation of failures, malfunctions and defects
21A.3B(c)	Airworthiness directives – obligation to propose and make available corrective action
21A.129	Obligations of manufacturer
21A.165	Obligations of a production organisation approval holder
21A.727	Obligations of the holder of a permit to fly
M.A.202	Occurrence reporting

* SI 2010/770

Part B, Section 2 (Continued)

Provision of Part 21, M, 145, 66 or 147	Subject Matter
M.A.303	Carrying out airworthiness directives
M.A.305	Aircraft continuing airworthiness record system
M.A.306	Operator's technical log system
M.A.708	Continuing airworthiness management
M.A.710	Conduct of airworthiness review
145.A.50	Certification of release to service for maintenance
145.A.55	Maintenance records to be kept by organisation approved under Part 145
145.A.60	Occurrence reporting

Part B, Section 3

Provision of EU-OPS	Subject Matter
1.030	Operator to establish and operate in accordance with minimum equipment list
1.070	Carriage of sporting weapons and ammunition
1.075	Carriage of person in part of aeroplane not designed for that purpose
1.085(f) 7, 8, 10, and 12	Responsibilities of commander
1.160	Preservation, production and use of flight recorder recordings
1.240	Operator's responsibilities in relation to routes and areas of operation
1.241	Operation in airspace with reduced vertical separation minima
1.243	Operation in areas with specific navigation performance requirements
1.245	Operation at distance from nearest aerodrome of two engined aeroplane without ETOPS approval
1.246	Requirement for ETOPS approval
1.285	Requirement for passenger briefing
1.290(b)	Flight preparation by commander
1.310(a)1 and 2	Flight crew to remain at station
1.320	Crew and passengers to be secured
1.398	Use of airborne collision avoidance system
1.430	Aerodrome operating minima
1.470	Performance requirements
1.605	Requirements for loading, mass and balance and centre of gravity
1.625	Mass and balance documentation
1.630(a)	Instruments and equipment required for flight
1.845(a)	Communication and navigation equipment required for flight
1.875	Aeroplane maintenance requirements
1.940	Composition of flight crew
1.943	Crew resource management training
1.945	Conversion training and checking
1.950	Differences and familiarisation training

Part B, Section 3 (Continued)

Provision of EU-OPS	Subject Matter
1.960	Commanders holding a Commercial Pilot Licence – operator's obligations
1.965	Training and checking crew
1.990	Number and composition of cabin crew
1.1040	Operations manual requirements
1.1100	Flight and duty limitations
1.1195	Requirements for acceptance of dangerous goods
1.1200(a)	Inspection for damage, leakage or contamination
1.1205(a)	Removal of contamination
1.1205(b)	Steps to be taken in the event of contamination
1.1210	Loading restrictions
1.1215	Provision of information
1.1220	Training requirements
1.1225	Reporting of dangerous goods incidents and accidents

PART C – PROVISIONS REFERRED TO IN ARTICLE 241(7)

Part C, Section 1 (Continued)

	Article of Order	Subject Matter
	11	Aircraft not to fly for commercial air transport without EU-OPS AOC
	12(1)	Aircraft not to fly for public transport without national AOC or EU-OPS AOC
	13(4)	Aircraft not to fly in the service of a police authority except under a Police Air Operator's Certificate, a national Air Operator's Certificate or an EU-OPS Air Operator Certificate
**	14(1)	Offering commercial air transport and public transport flights without national AOC or EU-OPS AOC
	16(1)	Aircraft not to fly without a certificate of airworthiness
	16(7)	Aircraft to comply with flight manual
	17(2)	Non-military State aircraft to have a national certificate of airworthiness or an EASA certificate of airworthiness
	17(3)	Requirements for non-military State aircraft with EASA certificate of airworthiness
	50	Requirement for appropriate licence to act as member of flight crew of EASA aircraft registered in the United Kingdom
*	50A	Requirement for appropriate licence to act as member of flight crew of non-EASA aircraft registered in the United Kingdom
	61	Requirement for appropriate licence to act member of flight crew of aircraft registered elsewhere than in the United Kingdom
	120	Obligations of operator and commander when flying over foreign country
	132(2)	Requirement to comply with regulations for the carriage of dangerous goods
	133(2)	Requirements for carriage of munitions of war
	133(3)	Prohibition on carriage of sporting weapon or munition of war where passengers have access

* SI 2012/1751
** SI 2013/3169

Part C, Section 1 (Continued)

	Article of Order	Subject Matter
	134	Prohibition on carrying on board sporting weapons or munitions of war
	138	Endangering safety of any person or property
	139	Drunkenness in aircraft
	142(c)	Intentional interference
	149	Fatigue of crew – EU-OPS operator's responsibilities
	145(1)	Operator's obligation to regulate flight times of crew
	145(2)	Operator's obligation not permit flight by crew in dangerous state of fatigue
	146(1)	Crew's obligation not to fly in dangerous state of fatigue
	148	Protection of air crew from cosmic radiation
	151	Keeping and production of records of exposure to cosmic radiation
	169(1)	Requirement for air traffic control approval
*	177(1)	Requirement to hold student air traffic controller licence or air traffic controller licence
*	193	Obligation not to exercise the privileges of a student air traffic controller licence or an air traffic controller licence if fatigued
*	194	Obligation not to exercise the privileges of a student air traffic controller licence or an air traffic controller licence if under the influence of a psychoactive substance or medicines
	217(6)	Aviation fuel not to be dispensed if not fit for use
	217(7)	Compliance with direction not to dispense aviation fuel
***	223(1)	Restriction on carriage, where valuable consideration is given or promised, in aircraft registered elsewhere than in the United Kingdom
	223(7)	Restriction on holding self out as a person offering carriage by air
**	225	Restriction on aerial photography, aerial survey and aerial work in aircraft registered elsewhere than in an EEA state
	226(5) to (8)	Requirements to report occurrences
	231 (except (2) and (5))	Prohibitions in relation to documents and records
	232(3)	Flight in contravention of CAA's direction not to fly
	233	Flight by third country aircraft in contravention of direction not to fly
	236(3)	Flight in contravention of Secretary of State's direction not to fly

Part C, Section 2

Provision of Part 21, M, 145, 66 or 147	Subject Matter
M.A.201(a) and (b)	Responsibilities of owner or lessee
M.A.201(d)	Responsibilities of the pilot in command or operator
M.A.201(e) & (f)	Responsibilities of continuing airworthiness management organisation
M.A.201(h)	Obligations of commercial air transport operator
M.A.201(i)	Obligations of certificated operator

* SI 2012/1751
** SI 2011/2432
*** SI 2014/508

Part C, Section 2 (Continued)

Provision of Part 21, M, 145, 66 or 147	Subject Matter
M.A.403	Aircraft defects to be rectified
M.A.902(b)	Aircraft not to fly if airworthiness review certificate invalid

Part C, Section 3

Provision of EU-OPS	Subject Matter
1.065	Prohibition of carriage of weapons or munitions of war
1.085(d) 4 and 5	Crew member's obligation not to fly in dangerous state of fatigue
1.390(a) 1 to 4	Protection of crew from cosmic radiation
1.1090 paragraphs 1 to 3	Operator's obligations for flight and duty time limitations and rest scheme
1.1090 paragraph 4.1	Crew member not to operate when fatigued or unfit
1.1145	Operator to comply with Technical Instructions
1.1155(a)	Operator to hold approval to transport dangerous goods
1.1165	Operator not to carry dangerous goods forbidden for transport by air

* **Part C, Section 4**

Provision of EASA Air Traffic Controller Licensing Regulation	Subject Matter
Article 17(1)	Reduced medical fitness

PART D – PROVISIONS REFERRED TO IN ARTICLE 241(8)

Article of Order	Subject Matter
137	Endangering safety of an aircraft

* SI 2012/1751

SCHEDULE 14 **Article 248(1)**

PARTS OF STRAITS SPECIFIED IN CONNECTION WITH THE FLIGHT OF AIRCRAFT IN TRANSIT OVER UNITED KINGDOM TERRITORIAL WATERS

22 The parts of straits specified in paragraph 2 are specified for the purposes of article 248(1).

23 (1) In the Straits of Dover, the territorial waters adjacent to the United Kingdom which are:

(a) to the south of a rhumb line joining position 51°08′23″ north latitude: 1°23′00″ east longitude and position 51°22′41″ north latitude: 1°50′06″ east longitude; and

(b) to the east of a rhumb line joining position 50°54′33″ north latitude: 0°58′05″ east longitude and position 50°43′15″ north latitude: 0°51′39″ east longitude;

(2) In the North Channel, the territorial waters adjacent to the United Kingdom which are:

(a) to the north of a rhumb line joining position 54°13′30″ north latitude: 5°39′28″ west longitude and position 54°09′02″ north latitude: 5°18′07″ west longitude;

(b) to the west of a rhumb line joining position 54°26′02″ north latitude: 4°51′37″ west longitude and position 54°38′01″ north latitude: 4°51′16″ west longitude; and

(c) to the east of a rhumb line joining:

(i) position 55°40′24″ north latitude: 6°30′59″ west longitude and position 55°29′24″ north latitude: 6°40′31″ west longitude;

(ii) position 55°24′54″ north latitude: 6°44′33″ west longitude and position 55°10′15″ north latitude: 6°44′33″ west longitude;

(3) In the Fair Isle Channel, the territorial waters adjacent to the United Kingdom which are:

(a) to the north of a rhumb line joining position 59°10′54″ north latitude: 2°01′32″ west longitude and position 59°33′27″ north latitude: 2°38′35″ west longitude; and

(b) to the south of a rhumb line joining position 59°51′06″ north latitude: 0°52′10″ west longitude and position 59°51′06″ north latitude: 1°46′36″ west longitude.

INTENTIONALLY LEFT BLANK

TABLE OF COMPARISON

(This Table is not part of the Order)

The following Table shows, in relation to each article of the Air Navigation Order 2005, as amended, the article of the 2009 Order in which it is reproduced.

2005 Order as amended	2009 Order
1	1
2	2
3	3
4	4, 5, 6, 7, 8 and 9
5	10
6	12
7	13
8	16
9	18
10	19
11	21, 22 and 23
12	Omitted
13	24
14	25 and 26
15	27
16	28, 29, 30 and 31
17	32
18	33
19	37 and 38
20	39
21	41
22	34
23	35
24	36
25	42, 43, 44, 45, 46, 47, 48 and 49
26	50 to 59 and 61 to 63
27	64 and 82
28	66
28A	71
29	67 and 70
30	Deleted
31	68
31A	69
32	72
32A	73
32B	74
32C	75
33	60, 76 and 77
34	78
35	79
36	80
37	81
38	83
39	84
40	85
41	94

2005 Order as amended	2009 Order
42	95 and 96
43	98 to 102
44	103
45	104, 105 and 106
46	97
47	107
48	108
49	109
50	93
51	111
52	86 and 87
52A	110
53	88
54	89, 90 and 91
54A	92
55	112
56	121
57	122
58	123
59	124
60	125
61	113
61A	114
62	152 to 155
62A	115
63	126
64	127
65	128
66	129
67	130
68	131
69	133 to 136
70	132
71	116
72	117 and 118
72A	119
73	137
74	138
75	139
76	140
77	141
78	142
79	143
80	162
81	144
82	145 and 149
83	146
84	147
85	148
86	150
87	151
88	156

2005 Order as amended	2009 Order
89	157
90	158
91	159
92	228
93	230
94	231
95	160
96	161
97	163, 164 and 165
98	166
99	168
100	169
101	170
102	171
103	172
104	173
105	174
106	175
107	177
107A	178
107B	179
107C	180
108	181
108A	182
108B	183
108C	184
108D	185
109	186
109A	187
110	188
111	189
112	190
113	191
114	192
115	193
116	194
117	195
118	196
119	197
119A	198
119B	199
119C	200
120	201
121	202
122	203
123	204
124	205
125	206
126	207, 208 and 209
127	210
128	211 and 212
129	213

2005 Order as amended	2009 Order
130	214
131	215
132	218
133	219
134	220
135	221
136	216
137	217
138	223
139	224
140	225
141	120
141A	237
142	226
143	227
144	232 to 236
144A	233
144B	234
144C	235
145	238
146	239
147	240
148	241
149	247
150	248
151	249
152	250, 251 and 252
153	242
154	243
155	255, 256 and 257
156	258
157	259, 260, 262, 263 and 264
158	265
159	266
160	267
161	268
162	269
163	270
164	253
165	244
166	245
167	246
168	254

SECTION 2 THE RULES OF THE AIR REGULATIONS 2007[(a)]

Made 7 March 2007

Coming into force 30 March 2007

The Secretary of State for Transport in exercise of the powers conferred by Article 95(1) of the Air Navigation Order 2005[(b)], makes the following Regulations:

1 These Regulations may be cited as the Rules of the Air Regulations 2007, and shall come into force on 30 March 2007.

2 The Rules of the Air set out in Schedule 1 shall have effect and may be cited as the Rules of the Air 2007.

3 The Regulations specified in Schedule 2 are revoked.

(a) Incorporating The Rules of the Air (Amendment) Regulations 2009 which came into force on 1 September 2009 (S.I. 2009/2169).

(b) S.I. 2005/1970, amended by S.I. 2007/274; there is another amendment not relevant to these Regulations.

SCHEDULE ONE **Regulation 2**

THE RULES OF THE AIR – ARRANGEMENT OF RULES

SECTION 1 INTERPRETATION

1 Interpretation

SECTION 2 GENERAL

2 Application of Rules to aircraft
3 Misuse of signals and markings
4 Reporting hazardous conditions

SECTION 3 LOW FLYING RULE

5 Low Flying Prohibitions
6 Exemptions from the low flying prohibitions

SECTION 4 GENERAL FLIGHT RULES

7 Weather reports and forecasts
8 Avoiding aerial collisions
9 Converging
10 Approaching head-on
11 Overtaking
12 Flight in the vicinity of an aerodrome
13 Order of landing
14 Landing and take-off
15 Aerobatic manoeuvres
16 Right-hand traffic rule
17 Notification of arrival and departure
18 Flights in Class A airspace
19 Flights in Class C Airspace
20 Choice of VFR or IFR
21 Speed limitations
22 Use of radio navigation aids
23 Simulated instrument flight
24 Practice instrument approaches
24A Test flying over congested areas

SECTION 5 VISUAL FLIGHT RULES

25 Applicability of the Visual Flight Rules
26 Reported Visibility
27 Flights within controlled airspace
28 Flights outside controlled airspace
29 VFR flight plan and air traffic control clearance in Class B, Class C and Class D airspace
30 Maintaining continuous watch and complying with air traffic control clearance
31 Exceptions to rules 29 and 30

SECTION 6 INSTRUMENT FLIGHT RULES

32 Instrument Flight Rules
33 Minimum height
34 Quadrantal Rule and semi-circular Rule
35 Flight plan and air traffic control clearance
36 Compliance with air traffic control clearance and notified procedures
37 Position reports

SECTION 7 AERODROME TRAFFIC RULES

38 Application of aerodrome traffic rules
39 Visual signals
40 Movement of aircraft on aerodromes
41 Access to and movement of persons and vehicles on the aerodrome
42 Right of way on the ground
43 Action to be taken in case of danger of collision on the ground
44 Launching, picking up and dropping of tow ropes, etc
45 Flight within aerodrome traffic zones

SECTION 8 LIGHTS AND OTHER SIGNALS TO BE SHOWN OR MADE BY AIRCRAFT

46 General
47 Display of lights by aircraft
48 Failure of navigation and anti-collision lights
49 Flying machines at night
50 Gliders at night
51 Free balloons at night
52 Captive balloons and kites at night
53 Captive balloons and kites by day
54 Airships at night
55 Airships by day

SECTION 9 AERODROME SIGNALS AND MARKINGS – VISUAL AND AURAL SIGNALS

56 General
57 Signals in the signals area
58 Markings for paved runways and taxiways
59 Markings on unpaved manoeuvring areas
60 Signals visible from the ground
61 Lights and pyrotechnic signals for control of aerodrome traffic
62 Marshalling signals (from a marshaller to an aircraft)
63 Marshalling signals (from a pilot of an aircraft to a marshaller)
64 Distress, urgency and safety signals

SECTION 1 INTERPRETATION

Interpretation

1 In these Rules:

(a) 'air-taxiing' means flight by a helicopter, or other type of aircraft capable of vertical take-off and landing, above the surface of an aerodrome at a ground speed of less than 20 knots for the purpose of taxiing in accordance with normal aviation practice;

(b) 'air traffic control clearance' means an authorisation by an air traffic control unit for an aircraft to proceed under conditions specified by that unit;

(c) 'anti-collision light' means:

(i) in relation to rotorcraft, a flashing red light;

(ii) in relation to any other aircraft, a flashing red or flashing white light,

in either case showing in all directions;

(d) 'Class C ATS route' means a route notified as such;

(e) 'ground visibility' means the horizontal visibility at ground level;

(f) 'flight plan' means a plan containing such information as may be notified to an air traffic control service unit, being information provided or to be provided to that unit which relates to an intended flight, or part of a flight, of an aircraft in accordance with these Rules;

(g) 'IFR flight' means a flight conducted in accordance with the Instrument Flight Rules in Section 6 of these Rules;

(h) 'Order' means the Air Navigation Order 2005;

(i) 'runway' means an area, whether or not paved, which is provided for the take-off or landing of aircraft;

(j) 'simulated instrument flight conditions' means a flight during which mechanical or optical devices are used in order to reduce the field of vision or the range of visibility from the cockpit of the aircraft;

(k) 'special VFR flight' means a flight:

(i) made at any time in a control zone which is Class A airspace or made in any other control zone in either Instrument Meteorological Conditions or at night;

(ii) in respect of which the appropriate air traffic control unit has given permission for the flight to be made in accordance with special instructions given by that unit instead of in accordance with the Instrument Flight Rules; and

(iii) in the course of which the aircraft complies with any instructions given by that unit and the aircraft remains clear of cloud and with the surface in sight;

(l) 'VFR flight' means a flight conducted in accordance with the Visual Flight Rules in Section 5 of these Rules.

SECTION 2 GENERAL

Application of Rules to aircraft

2 These Rules, insofar as they apply to aircraft, shall apply:

(a) to all aircraft within the United Kingdom;

(b) for the purposes of rule 5, to all aircraft in the neighbourhood of an offshore installation; and

(c) to all aircraft registered in the United Kingdom, wherever they may be.

Misuse of signals and markings

3 (1) A signal or marking which is given a meaning by Section 9 or which is required by Section 9 to be used in specified circumstances or for a specified purpose shall not be used except with that meaning, in those circumstances or for that purpose.

(2) A person in an aircraft or on an aerodrome or at any place at which an aircraft is taking off or landing shall not:

(a) make any signal which may be confused with a signal specified in Section 9; or

(b) except with lawful authority, make any signal which he knows or ought reasonably to know to be a signal in use for signalling to or from any of Her Majesty's naval, military or air force aircraft.

Reporting hazardous conditions

4 (1) If any aircraft encounters hazardous conditions in the course of a flight, the commander of the aircraft shall send to the appropriate air traffic control unit, by the quickest means available to him, information containing such particulars of the hazardous conditions as may be pertinent to the safety of other aircraft.

(2) The information shall be sent immediately the aircraft encounters the hazardous conditions or as soon as it is possible to do so afterwards.

SECTION 3 LOW FLYING RULE

Low flying prohibitions

5 (1) Subject to paragraph (2), an aircraft shall comply with the low flying prohibitions in paragraph (3) unless exempted by rule 6.

(2) If an aircraft is flying in circumstances such that more than one of the low flying prohibitions apply, it shall fly at the greatest height required by any of the applicable prohibitions.

(3) The low flying prohibitions are as follows:

(a) Failure of power unit

An aircraft shall not be flown below such height as would enable it to make an emergency landing without causing danger to persons or property on the surface in the event of a power unit failure.

(b) The 500 feet rule

Except with the written permission of the CAA, an aircraft shall not be flown closer than 500 feet to any person, vessel, vehicle or structure.

(c) The 1,000 feet rule

Except with the written permission of the CAA, an aircraft flying over a congested area of a city town or settlement shall not fly below a height of 1,000 feet above the highest fixed obstacle within a horizontal radius of 600 metres of the aircraft.

(d) The land clear rule

An aircraft flying over a congested area of a city, town or settlement shall not fly below such height as would permit the aircraft to land clear of the congested area in the event of a power unit failure.

(e) Flying over open air assemblies

Except with the written permission of the CAA, an aircraft shall not fly over an organised open-air assembly of more than 1,000 persons below the higher of the following heights:

(i) 1,000 feet; or

(ii) such height as would permit the aircraft to land clear of the assembly in the event of a power unit failure.

(f) Landing and taking off near open air assemblies

An aircraft shall not land or take-off within 1,000 metres of an organised, open-air assembly of more than 1,000 persons except:

(i) at an aerodrome, in accordance with procedures notified by the CAA; or

(ii) at a landing site which is not an aerodrome, in accordance with procedures notified by the CAA and with the written permission of the organiser of the assembly.

Exemptions from the low flying prohibitions

6 The exemptions from the low flying prohibitions are as follows:

(a) Landing and taking off

(i) Any aircraft shall be exempt from the low flying prohibitions in so far as it is flying in accordance with normal aviation practice for the purpose of:

(aa) taking off from, landing at or practising approaches to landing at; or

(bb) checking navigational aids or procedures at,

a Government or licensed aerodrome.

(ii) Any aircraft shall be exempt from the 500 feet rule when landing and taking-off in accordance with normal aviation practice or air-taxiing.

* (aa) Landing and taking off at a training aerodrome

(i) Any aeroplane of which the maximum total weight authorised does not exceed 2730kg shall be exempt from the low flying prohibitions in so far as it is flying in accordance with normal aviation practice in the circumstances specified in sub-paragraph (iii).

(ii) Any helicopter or gyroplane of which the maximum total weight authorised does not exceed 3175kg shall be exempt from the low flying prohibitions in so far as it is flying in accordance with normal aviation practice in the circumstances specified in sub-paragraph (iii).

(iii) An aeroplane or helicopter or gyroplane flies in the circumstances specified in this sub-paragraph if:

(aa) it is flying for the purpose of taking off from, landing at or practising approaches to landing at a training aerodrome; and

(bb) the flight is one on which instruction in flying is being given to a person or a flying test is being performed by a person for the purpose of becoming qualified for the grant of a pilot's licence or the inclusion or variation of an aircraft rating, a night rating or a night qualification in a licence.

(iv) For the purposes of sub-paragraph (iii), a "training aerodrome" means an aerodrome which the commander of the aircraft is satisfied on reasonable grounds has adequate facilities for the safe conduct of flights on which instruction in flying is being given to a person for the purpose of becoming qualified for the grant of a pilot's licence or the inclusion or variation of any rating or qualification in the licence.

(b) Captive balloons and kites

None of the low flying prohibitions shall apply to any captive balloon or kite.

(c) Special VFR flight and notified routes

(i) Subject to paragraph (ii), any aircraft shall be exempt from the 1,000 feet rule if:

(aa) it is flying on a special VFR flight; or

(bb) it is operating in accordance with the procedures notified for the route being flown.

* SI 2010/841

(ii) Unless the written permission of the CAA has been obtained, landings may only be made by an aircraft flying under this exemption at a licensed or Government aerodrome.

(d) Balloons and helicopters over congested areas

(i) A balloon shall be exempt from the 1,000 feet rule if it is landing because it is becalmed.

(ii) Any helicopter flying over a congested area shall be exempt from the land clear rule.

(e) Police air operator's certificate

Any aircraft flying in accordance with the terms of a police air operator's certificate shall be exempt from the 500 feet rule, the 1,000 feet rule and the prohibitions on flying over open air assemblies and on landing and taking off near open air assemblies.

(f) Flying displays etc.

An aircraft taking part in a flying display, air race or contest shall be exempt from the 500 feet rule if it is within a horizontal distance of 1,000 metres of the gathering of persons assembled to witness the event.

(g) Glider hill-soaring

A glider shall be exempt from the 500 feet rule if it is hill-soaring.

(h) Picking up and dropping at an aerodrome

Any aircraft picking up or dropping tow ropes, banners or similar articles at an aerodrome shall be exempt from the 500 feet rule.

(i) Manoeuvring helicopters

(i) Subject to paragraph (ii), a helicopter shall be exempt from the 500 feet rule if it is conducting manoeuvres, in accordance with normal aviation practice, within the boundaries of a licensed or Government aerodrome or, with the written permission of the CAA, at other sites.

(ii) When flying in accordance with this exemption the helicopter must not be operated closer than 60 metres to any persons, vessels, vehicles or structures located outside the aerodrome or site.

(j) Dropping articles with CAA permission

Any aircraft shall be exempt from the 500 feet rule if it is flying in accordance with:

(i) article 66(3)(f) of the Order (dropping of articles for the purposes of public health or as a measure against weather conditions etcetera, with the permission of the CAA); or

(ii) an aerial application certificate granted by the CAA under article 68(2) of the Order.

SECTION 4 GENERAL FLIGHT RULES

Weather reports and forecasts

7 (1) Subject to paragraph (2), immediately before an aircraft flies the commander of the aircraft shall examine the current reports and forecasts of the weather conditions on the proposed flight path, in order to determine whether Instrument Meteorological Conditions prevail, or are likely to prevail, during any part of the flight.

(2) Paragraph (1) shall only apply if it is reasonably practicable for the commander to obtain current reports and forecasts of the weather conditions on the proposed flight path.

(3) Subject to paragraph (4), an aircraft which is unable to communicate by radio with an air traffic control unit at the aerodrome of destination shall not begin a flight to the aerodrome if:

(a) the aerodrome is within a control zone; and

(b) the weather reports and forecasts which it is reasonably practicable for the commander of the aircraft to obtain indicate that it will arrive at that aerodrome when the ground visibility is less than 10 km or the cloud ceiling is less than 1,500 feet.

(4) Paragraph (3) shall not apply if, before take-off, the commander of the aircraft has obtained permission from the air traffic control unit at the aerodrome destination to enter the aerodrome traffic zone.

Avoiding aerial collisions

8 (1) Notwithstanding that a flight is being made with air traffic control clearance it shall remain the duty of the commander of an aircraft to take all possible measures to ensure that his aircraft does not collide with any other aircraft.

(2) An aircraft shall not be flown in such proximity to other aircraft as to create a danger of collision.

(3) Subject to sub-paragraph (7), aircraft shall not fly in formation unless the commanders of the aircraft have agreed to do so.

(4) An aircraft which is obliged by this Section to give way to another aircraft shall avoid passing over or under the other aircraft, or crossing ahead of it, unless passing well clear of it.

(5) Subject to sub-paragraph (7), an aircraft which has the right-of-way under this rule shall maintain its course and speed.

(6) For the purposes of this rule a glider and a flying machine which is towing it shall be considered to be a single aircraft under the command of the commander of the flying machine.

(7) Sub-paragraphs (3) and (5) shall not apply to an aircraft flying under and in accordance with the terms of a police air operator's certificate.

Converging

9 (1) Subject to paragraphs (2) and (3) and to rules 10 and 11, aircraft in the air shall give way to other, converging aircraft as follows:

(a) flying machines shall give way to airships, gliders and balloons;

(b) airships shall give way to gliders and balloons;

(c) gliders shall give way to balloons.

(2) Mechanically driven aircraft shall give way to aircraft which are towing other aircraft or objects.

(3) Subject to paragraphs (1) and (2), when two aircraft are converging in the air at approximately the same altitude, the aircraft which has the other on its right shall give way.

Approaching head-on

10 When two aircraft are approaching head-on, or approximately so, in the air and there is a danger of collision, each shall alter its course to the right.

Overtaking

11 (1) Subject to paragraph (3), an aircraft which is being overtaken in the air shall have the right-of-way and the overtaking aircraft, whether climbing, descending or in horizontal flight, shall keep out of the way of the other aircraft by altering course to the right.

(2) An aircraft which is overtaking another aircraft shall keep out of the way of the other aircraft until that other aircraft has been passed and is clear, notwithstanding any change in the relative positions of the two aircraft.

(3) A glider overtaking another glider in the United Kingdom may alter its course to the right or to the left.

Flight in the vicinity of an aerodrome

12 (1) Subject to paragraph (2), a flying machine, glider or airship flying in the vicinity of what the commander of the aircraft knows, or ought reasonably to know, to be an aerodrome shall:

(a) conform to the pattern of traffic formed by other aircraft intending to land at that aerodrome or keep clear of the airspace in which the pattern is formed; and

(b) make all turns to the left unless ground signals otherwise indicate.

(2) Paragraph (1) shall not apply if the air traffic control unit at that aerodrome otherwise authorises.

Order of landing

13 (1) An aircraft landing or on its final approach to land shall have the right-of-way over other aircraft in flight or on the ground or water.

(2) An aircraft shall not overtake or cut in front of another aircraft on its final approach to land.

(3) If an air traffic control unit has communicated to any aircraft an order of priority for landing, the aircraft shall approach to land in that order.

(4) If the commander of an aircraft is aware that another aircraft is making an emergency landing, he shall give way to that aircraft.

(5) If the commander gives way in the circumstances referred to in paragraph (4) at night then, notwithstanding that he may have previously received permission to land, he shall not attempt to land until he has received further permission to do so.

(6) Subject to paragraphs (2), (3) and (4), if two or more flying machines, gliders or airships are approaching any place for the purpose of landing, the aircraft at the lower altitude shall have the right-of-way.

Landing and take-off

14 (1) A flying machine, glider or airship shall take off and land in the direction indicated by the ground signals or, if no such signals are displayed, into the wind, unless good aviation practice demands otherwise.

(2) Subject to paragraph (5), a flying machine or glider shall not land on a runway at an aerodrome if there are other aircraft on the runway.

(3) If take-offs and landings are not confined to a runway:

(a) when landing a flying machine or glider shall leave clear on its left any aircraft which has landed, is already landing or is about to take off;

(b) a flying machine or glider which is about to turn shall turn to the left after the commander of the aircraft has satisfied himself that such action will not interfere with other traffic movements; and

(c) a flying machine which is about to take off shall take up position and manoeuvre in such a way as to leave clear on its left any aircraft which has already taken off or is about to take off.

(4) Subject to paragraph (5) a flying machine shall move clear of the landing area as soon as it is possible to do so after landing.

(5) Paragraphs (2) and (4) shall not apply if the air traffic control unit at the aerodrome otherwise authorises the flying machine or glider.

Aerobatic manoeuvres

15 An aircraft shall not carry out any aerobatic manoeuvre:

(a) over the congested area of any city, town or settlement; or

(b) within controlled airspace except with the consent of the appropriate air traffic control unit.

Right-hand traffic rule

16 (1) Subject to paragraph (2), an aircraft which is flying within the United Kingdom with the surface in sight and following a road, railway, canal or coastline, or any other line of landmarks, shall keep them on its left.

(2) Paragraph (1) shall not apply to an aircraft flying within controlled airspace in accordance with instructions given by the appropriate air traffic control unit.

Notification of arrival and departure

17 (1) If the commander of an aircraft has caused notice of the intended arrival of the aircraft at an aerodrome to be given to the air traffic control unit or other authority at that aerodrome, he shall ensure that the unit or authority is informed as quickly as possible of:

(a) any change of intended destination; and

(b) any estimated delay in arrival of 45 minutes or more.

(2) The commander of an aircraft arriving at or departing from an aerodrome in the United Kingdom shall take all reasonable steps to ensure, upon landing or prior to departure, as the case may be, that the person in charge of the aerodrome or the air traffic control unit or flight information service unit at the aerodrome is given notice of the landing or departure.

(3) Before an aircraft of which the maximum total weight authorised exceeds 5,700 kg takes off from an aerodrome in the United Kingdom on a flight with an intended destination more than 40 km from the aerodrome, the commander shall cause a flight plan, containing such particulars of the intended flight as may be necessary for search and rescue purposes, to be communicated to the air traffic control unit notified for the purpose of this rule.

(4) The commander of an aircraft who intends to fly or who flies across any boundary of airspace notified as either the London or Scottish Flight Information Region (apart from the boundary common to each), shall cause a flight plan, containing such particulars of the intended flight as may be necessary for search and rescue purposes, to be communicated to the appropriate air traffic control unit within the London or Scottish Flight Information Region before flying across the boundary.

Flight in Class A airspace

18 (1) Subject to paragraphs (2) and (3), the commander of an aircraft flying in Visual Meteorological Conditions in Class A airspace shall comply with rules 35, 36 and 37 as if the flight were an IFR flight.

(2) For the purposes of paragraph (1) rule 36(2) shall not apply.

(3) Paragraph (1) shall not apply to the commander of a glider which is flying in Class A airspace which is notified for the purpose of this paragraph if the glider is flown in accordance with such conditions as may also be notified for that purpose.

Flight in Class C Airspace

19 (1) Subject to paragraphs (2) and (3) the commander of an aircraft flying in Visual Meteorological Conditions in Class C airspace above flight level 195, or along a Class C ATS route at any level, shall comply with rules 35, 36 and 37 as if the flight were an IFR flight.

(2) For the purposes of paragraph (1) rule 36(2) shall not apply.

(3) Paragraph (1) shall not apply to the commander of an aircraft which is flying in accordance with an authorisation issued by the CAA.

Choice of VFR or IFR

20 (1) Subject to paragraph (2) an aircraft shall always be flown in accordance with the Visual Flight Rules or the Instrument Flight Rules.

(2) In the United Kingdom an aircraft flying at night shall:

(a) be flown in accordance with the Instrument Flight Rules outside a control zone;

(b) be flown in accordance with the Instrument Flight Rules in a control zone unless it is flying on a special VFR flight.

Speed limitations

21 (1) Subject to paragraph (2), an aircraft shall not fly below flight level 100 at a speed which, according to its air speed indicator, is more than 250 knots.

(2) Paragraph (1) shall not apply to:

(a) flights in Class A airspace;

(b) VFR flights or IFR flights in Class B airspace;

(c) IFR flights in Class C airspace;

(d) VFR flights in Class C airspace or VFR flights or IFR flights in Class D airspace when authorised by the appropriate air traffic control unit;

(e) an aircraft taking part in an exhibition of flying for which a permission is required by article 80(1) of the Order, if the flight is made in accordance with the terms of the permission granted to the organiser of the exhibition of flying and in accordance with the conditions of the display authorisation granted to the pilot under article 80(6)(a) of the Order;

(f) the flight of an aircraft flying in accordance with the A Conditions or the B Conditions; or

(g) an aircraft flying in accordance with a written permission granted by the CAA authorising the aircraft to exceed the speed limit in paragraph (1).

(3) The CAA may grant a permission for the purpose of paragraph (2)(g) subject to such conditions as it thinks fit and either generally or in respect of any aircraft or class of aircraft.

Use of radio navigation aids

22 (1) Subject to paragraph (2), the commander of an aircraft shall not make use of any radio navigation aid without complying with such restrictions and procedures as may be notified in relation to that aid.

(2) The commander of an aircraft shall not be required to comply with this rule if:

(a) he is required to comply with rules 35 and 36; or

(b) he is otherwise authorised by an air traffic control unit.

Simulated instrument flight

23 (1) An aircraft shall not be flown in simulated instrument flight conditions unless the conditions in paragraph (2) are met.

(2) The conditions referred to in paragraph (1) are as follows:

(a) the aircraft is fitted with dual controls which are functioning properly;

(b) an additional pilot (in this rule called a 'safety pilot') is carried in a second control seat of the aircraft for the purpose of providing assistance to the pilot flying the aircraft; and

(c) if the safety pilot's field of vision is not adequate, both forwards and to each side of the aircraft, a third person, who is a competent observer, occupies a position in the aircraft from which his field of vision makes good the deficiencies in that of the safety pilot, and from which he can readily communicate with the safety pilot.

Practice instrument approaches

24 (1) An aircraft shall not carry out an instrument approach practice within the United Kingdom if it is flying in Visual Meteorological Conditions unless the conditions in paragraph (2) are met.

(2) The conditions referred to in paragraph (1) are as follows:

(a) the appropriate air traffic control unit has previously been informed that the flight is to be made for the purpose of instrument approach practice; and

(b) if the flight is not being carried out in simulated instrument flight conditions, a competent observer is carried in such a position in the aircraft that he has an adequate field of vision and can readily communicate with the pilot flying the aircraft.

* **Test flying over congested areas**

24A (1) An aircraft to which this paragraph applies shall not fly over a congested area except to the extent that it is necessary to do so in order to take off or land in accordance with normal aviation practice.

(2) Paragraph (1) does not apply if the CAA has given its written permission for a flight over the congested area.

(3) Paragraph (1) applies to an aircraft that does not have a valid certificate of airworthiness in force and which is flying for the purpose of:

(a) experimenting with or testing the aircraft or any engines or equipment installed or carried in the aircraft; or

(b) enabling the aircraft to qualify for the issue or validation of a certificate of airworthiness or the approval of a modification of the aircraft or the issue of a permit to fly.

* SI 2009/2169

SECTION 5 VISUAL FLIGHT RULES

Applicability of the Visual Flight Rules

25 (1) Within controlled airspace rules 27, 29 and 30 shall be the Visual Flight Rules.

(2) Outside controlled airspace rule 28 shall be the Visual Flight Rules.

Reported visibility

26 For the purposes of an aircraft taking off from or approaching to land at an aerodrome within Class B, Class C, or Class D airspace, the visibility, if any, communicated to the commander of the aircraft by the appropriate air traffic control unit shall be taken to be the flight visibility for the time being.

Flight within controlled airspace

27 (1) Subject to paragraph (4), an aircraft flying within Class B airspace:

(a) at or above flight level 100 shall remain clear of cloud and in a flight visibility of at least 8 km; and

(b) below flight level 100 shall remain clear of cloud and in a flight visibility of at least 5 km.

(2) Subject to paragraphs (3) and (4), an aircraft flying within Class C, Class D or Class E airspace:

(a) at or above flight level 100 shall remain at least 1,500 metres horizontally and 1,000 feet vertically away from cloud and in a flight visibility of at least 8 km;

(b) below flight level 100 shall remain at least 1,500 metres horizontally and 1,000 feet vertically away from cloud and in a flight visibility of at least 5 km.

(3) An aircraft shall be deemed to have complied with paragraph (2)(b) if:

(a) the aircraft is not a helicopter and it:

(i) flies at or below 3,000 feet above mean sea level;

(ii) flies at a speed which, according to its airspeed indicator, is 140 knots or less; and

(iii) remains clear of cloud, with the surface in sight and in a flight visibility of at least 5 km; or

(b) the aircraft is a helicopter and it-

(i) flies at or below 3,000 feet above mean sea level; and

(ii) remains clear of cloud, with the surface in sight and in a flight visibility of at least 1,500 metres.

(4) Paragraphs (1) and (2) shall not apply to a helicopter that is air-taxiing or conducting manoeuvres in accordance with rule 6(i).

Flight outside controlled airspace

28 (1) Subject to paragraph (6), an aircraft flying outside controlled airspace at or above flight level 100 shall remain at least 1,500 metres horizontally and 1,000 feet vertically away from cloud and in a flight visibility of at least 8 km.

(2) Subject to paragraphs (3), (4), (5) and (6), an aircraft flying outside controlled airspace below flight level 100 shall remain at least 1,500 metres horizontally and 1,000 feet vertically away from cloud and in a flight visibility of at least 5 km.

(3) Paragraph (2) shall not apply to an aircraft which:

(a) flies at or below 3,000 feet above mean sea level;

(b) remains clear of cloud with the surface in sight; and

(c) is in a flight visibility of at least 5 km.

(4) Paragraph (2) shall not apply to an aircraft which is not a helicopter and which:

(a) flies at or below 3,000 feet above mean sea level;

(b) flies at a speed which, according to its air speed indicator, is 140 knots or less;

(c) remains clear of cloud with the surface in sight; and

(d) is in a flight visibility of at least 1,500 metres.

(5) Paragraph (2) shall not apply to a helicopter which:

(a) flies at or below 3,000 feet above mean sea level;

* (b) flies at a speed which, having regard to the visibility, is reasonable;

(c) remains clear of cloud with the surface in sight; and

(d) is in a flight visibility of at least 1,500 metres.

(6) Paragraphs (1) and (2) shall not apply to a helicopter which is air-taxiing or conducting manoeuvres in accordance with rule 6(i).

VFR flight plan and air traffic control clearance in Class B, Class C or Class D airspace

29 (1) Subject to rule 31, before an aircraft flies within Class B, Class C or Class D airspace during the notified hours of watch of the appropriate air traffic control unit, the commander of the aircraft shall:

(a) cause to be communicated to the appropriate air traffic control unit a flight plan which complies with paragraphs (2) and (3) (as appropriate); and

(b) obtain an air traffic control clearance to fly within that airspace.

(2) The flight plan shall contain such particulars of the flight as may be necessary to enable the air traffic control unit to issue an air traffic control clearance and for search and rescue purposes.

(3) The flight plan required for a flight within United Kingdom reduced vertical separation minimum airspace shall also state whether or not the aircraft is equipped with height keeping systems, as required by articles 57 or 58 of the Order.

(4) The commander of an aircraft shall not cause a flight plan to be communicated to the appropriate air traffic control unit for VFR flight in Class C airspace above FL195 or along a Class C ATS route at any level unless authorised to do so by the CAA.

* SI 2007/1371

Maintaining continuous watch and complying with air traffic control instructions

30 (1) Subject to rule 31, whilst flying within Class B, Class C or Class D airspace during the notified hours of watch of the appropriate air traffic control unit, the commander of an aircraft shall:

(a) cause a continuous watch to be maintained on the notified radio frequency appropriate to the circumstances; and

(b) comply with any instructions which the appropriate air traffic control unit may give.

Exceptions to rules 29 and 30

31 (1) Rule 29 shall not apply if the aircraft has otherwise been authorised by the appropriate air traffic control unit.

(2) Rules 29(1) and 30 shall not apply to any glider flying or intending to fly in Class B airspace notified for the purpose of this paragraph.

(3) Rules 29(1) and 30 shall not apply to any glider which:

(a) flies during the day;

(b) is in controlled airspace notified for the purpose of this paragraph; and

(c) remains at least 1,500 metres horizontally and 1,000 feet vertically away from cloud and in a flight visibility of at least 8 km.

(4) Rules 29(1) and 30 shall not apply to any mechanically driven aircraft without radio equipment if:

(a) it flies during the day;

(b) it is in controlled airspace notified for the purpose of this paragraph;

(c) it remains at least 1,500 metres horizontally and 1,000 feet vertically away from cloud and in a flight visibility of at least 5 km; and

(d) its commander has previously obtained the permission of the appropriate air traffic control unit to fly within the controlled airspace.

SECTION 6 INSTRUMENT FLIGHT RULES

Instrument Flight Rules

32 (1) For flights within controlled airspace rules 33, 34, 35, 36 and 37 shall be the Instrument Flight Rules.

(2) For flights outside controlled airspace rules 33 and 34 shall be the Instrument Flight Rules.

Minimum height

33 (1) Subject to paragraphs (2) and (3), an aircraft shall not fly at a height of less than 1,000 feet above the highest obstacle within a distance of 5 nautical miles of the aircraft unless:

(a) it is necessary for the aircraft to do so in order to take off or land;

(b) the aircraft flies on a route notified for the purposes of this rule;

(c) the aircraft has been otherwise authorised by the competent authority in relation to the area over which the aircraft is flying; or

(d) the aircraft flies at an altitude not exceeding 3,000 feet above mean sea level and remains clear of cloud and with the surface in sight and in a flight visibility of at least 800 metres.

(2) The aircraft shall comply with rule 5.

(3) Paragraph (1) shall not apply to a helicopter that is air-taxiing or conducting manoeuvres in accordance with rule 6(i).

Quadrantal rule and semi-circular rule

34 (1) Subject to paragraphs (2) and (3), an aircraft in level flight above 3,000 feet above mean sea level or above the appropriate transition altitude, whichever is the higher, shall be flown at a level appropriate to its magnetic track, in accordance with Table 1 or Table 2, as appropriate.

(2) For the purposes of paragraph (1), the level of flight shall be measured by an altimeter set:

(a) in the case of a flight over the United Kingdom, to a pressure setting of 1013.2 hectopascals; or

(b) in the case of any other flight, according to the system published by the competent authority in relation to the area over which the aircraft is flying.

(3) An aircraft may be flown at a level other than the level required by paragraph (1) if it flies:

(a) in conformity with instructions given by an air traffic control unit;

(b) in accordance with notified en-route holding patterns; or

(c) in accordance with holding procedures notified in relation to an aerodrome.

(4) For the purposes of this rule 'transition altitude' means the altitude which is notified in relation to flights over notified areas.

Table 1 Flights At Levels Below 19,500 Feet

Magnetic Track	Cruising Level
Less than 90°	Odd thousands of feet.
90° but less than 180°	Odd thousands of feet + 500 feet.
180° but less than 270°	Even thousands of feet.
270° but less than 360°	Even thousands of feet + 500 feet.

Table 2 Flights At Levels Above 19,500 Feet

Magnetic Track	Cruising Level
Less than 180°	21 000 feet; 23 000 feet; 25 000 feet; 27 000 feet; 29 000 feet; 31 000 feet; 33 000 feet; 35 000 feet' 37 000 feet; 39 000 feet' 41 000 feet or higher levels at intervals of 4000 feet.
180° but less than 360°	20 000 feet; 22 000 feet; 24 000 feet; 26 000 feet; 28 000 feet; 30 000 feet; 32 000 feet; 34 000 feet; 36 000 feet; 38 000 feet; 40 000 feet; 43 000 feet or higher levels at intervals of 4000 feet.

Flight plan and air traffic control clearance

35 (1) Before an aircraft either takes off from a point within any controlled airspace or otherwise flies within any controlled airspace the commander of the aircraft shall:

(a) send or transmit a flight plan complying with paragraph (2) to the appropriate air traffic control unit; and

(b) obtain an air traffic control clearance based on that flight plan.

(2) The flight plan shall:

(a) contain such particulars of the intended flight as may be necessary to enable the air traffic control unit to issue an air traffic control clearance and for search and rescue purposes; and

(b) for a flight within United Kingdom reduced vertical separation minimum airspace, also state whether or not the aircraft is equipped with height keeping systems as required by articles 57 and 58 of the Order.

(3) Unless he has requested the appropriate air traffic control unit to cancel his flight plan, the commander of the aircraft shall forthwith inform that unit when the aircraft lands within or leaves the controlled airspace.

Compliance with air traffic control clearance and notified procedures

36 (1) Subject to paragraph (2), the commander of the aircraft shall fly in conformity with:

(a) the air traffic control clearance issued for the flight, as amended by any further instructions given by an air traffic control unit; and, unless he is otherwise authorised by the appropriate air traffic control unit;

(b) the instrument departure procedures notified in relation to the aerodrome of departure; and

(c) the holding and instrument approach procedures notified in relation to the aerodrome of destination.

(2) The commander of the aircraft shall not be required to comply with paragraph (1) if:

(a) he is able to fly in uninterrupted Visual Meteorological Conditions for so long as he remains in controlled airspace; and

(b) he has informed the appropriate air traffic control unit of his intention to continue the flight in compliance with Visual Flight Rules and has requested that unit to cancel his flight plan.

(3) If any deviation is made from the provisions of paragraph (2) for the purpose of avoiding immediate danger the commander of the aircraft shall inform the appropriate air traffic control unit of the deviation as soon as possible.

Position reports

37 The commander of an aircraft in IFR flight who flies in or is intending to enter controlled airspace shall report to the appropriate air traffic control unit the time, position and level of the aircraft at such reporting points or at such intervals of time as may be notified for this purpose or as may be directed by the air traffic control unit.

SECTION 7 AERODROME TRAFFIC RULES

Application of aerodrome traffic rules

38 The rules in this Section which expressly apply to flying machines shall also be observed, so far as is practicable, by all other aircraft.

Visual signals

39 (1) Subject to paragraph (2), the commander of a flying machine on, or in the pattern of traffic flying at, an aerodrome shall:

(a) observe such visual signals as may be displayed at or directed to him from the aerodrome by the authority of the person in charge of the aerodrome; and

(b) obey any instructions which may be given to him by means of such signals.

(2) The commander of a flying machine shall not be required to obey such signals if it is inadvisable to do so in the interests of safety.

Movement of aircraft on aerodromes

40 An aircraft shall not taxi on the apron or the manoeuvring area of an aerodrome without the permission of either:

(a) the person in charge of the aerodrome; or

(b) the air traffic control unit or aerodrome flight information service unit notified as being on watch at the aerodrome.

Access to and movement of persons and vehicles on the aerodrome

41 (1) Unless there is a public right of way over it, a person or vehicle shall:

(a) not go onto any part of an aerodrome without the permission of the person in charge of that part of the aerodrome; and

(b) comply with any conditions subject to which that permission may be granted.

(2) A person or vehicle shall:

(a) not go onto or move on the manoeuvring area of an aerodrome which has an air traffic control unit or an aerodrome flight information service unit without the permission of that unit; and

(b) comply with any conditions subject to which that permission may be granted.

(3) Any permission granted for the purposes of this rule may be granted in respect of persons or vehicles generally, or in respect of any particular person or vehicle or any class of person or vehicle.

Right of way on the ground

42 (1) This rule shall apply to flying machines and vehicles on any part of a land aerodrome provided for the use of aircraft and under the control of the person in charge of the aerodrome.

(2) Notwithstanding any air traffic control clearance it shall remain the duty of the commander of a flying machine to take all possible measures to ensure that his flying machine does not collide with any other aircraft or vehicle or with any obstacle. *

* SI 2008/669

* (2A) Where a flying machine is being towed on the ground and the commander of the flying machine is not on board, then notwithstanding any air traffic control clearance it is the duty of the person in charge of the vehicle towing the flying machine to take all possible measures to ensure that the aircraft does not collide with any other aircraft or vehicle or with any obstacle.

(3) Flying machines and vehicles shall give way to aircraft which are taking off or landing.

(4) Vehicles and flying machines which are not taking off or landing shall give way to vehicles towing aircraft.

(5) Vehicles which are not towing aircraft shall give way to aircraft.

Action to be taken in case of danger of collision on the ground

43 (1) Subject to rules 42 and 14(3), this rule shall apply if there is any danger of collision between two flying machines on the ground.

(2) If the two flying machines are approaching head-on, or approximately so, each shall alter its course to the right.

(3) If the two flying machines are on converging courses, the flying machine which has the other flying machine on its right shall give way to that other flying machine and shall avoid crossing ahead of it unless passing well clear of it.

(4) A flying machine which is being overtaken by another flying machine shall have the right-of-way over the flying machine overtaking it.

(5) A flying machine which is overtaking another flying machine shall keep out of the way of the other flying machine by altering its course to the left until that other flying machine has been passed and is clear, notwithstanding any change in the relative positions of the two flying machines.

(6) A vehicle shall:

(a) overtake another vehicle on the right hand side of that vehicle; and

(b) keep to the left when passing another vehicle which is approaching head-on or approximately so.

Launching, picking up and dropping of tow ropes, etc.

44 (1) Tow ropes, banners or similar articles towed by aircraft shall not be launched at an aerodrome except in accordance with arrangements made with:

(a) the air traffic control unit at the aerodrome; or

(b) if there is no such unit, the person in charge of the aerodrome.

(2) Tow ropes, banners or similar articles towed by aircraft shall not be picked up by or dropped from aircraft at an aerodrome except:

(a) in accordance with arrangements made with the air traffic control unit at the aerodrome or, if there is no such unit, with the person in charge of the aerodrome; or

(b) in the area designated by the marking described in rule 59(9), but only when the aircraft is flying in the direction appropriate for landing.

* SI 2008/669

Flight within aerodrome traffic zones

45 (1) Paragraphs (2) and (3) shall apply only in relation to those aerodromes described in Column 1 of Table 3 as are notified for the purposes of this rule and at such times as are specified in Column 2 of the Table.

Table 3

Column 1	Column 2
(a) A Government aerodrome	At such times as are notified
(b) An aerodrome having an air traffic control unit or flight information service unit	During the notified hours of watch of the air traffic control unit or the flight information service unit
(c) A licensed aerodrome having a means of two-way radio communication with aircraft	During the notified hours of watch of the air/ground radio station

(2) An aircraft shall not fly, take off or land within the aerodrome traffic zone of an aerodrome unless the commander of the aircraft has complied with paragraphs (3), (4) or (5), as appropriate.

(3) If the aerodrome has an air traffic control unit the commander shall obtain the permission of the air traffic control unit to enable the flight to be conducted safely within the zone.

(4) If the aerodrome has a flight information service unit the commander shall obtain information from the flight information service unit to enable the flight to be conducted safely within the zone.

(5) If there is no flight information service unit at the aerodrome the commander shall obtain information from the air/ground communication service to enable the flight to be conducted safely within the zone.

(6) The commander of an aircraft flying within the aerodrome traffic zone of an aerodrome shall:

(a) cause a continuous watch to be maintained on the appropriate radio frequency notified for communications at the aerodrome; or

(b) if this is not possible, cause a watch to be kept for such instructions as may be issued by visual means; and

(c) if the aircraft is fitted with means of communication by radio with the ground, communicate his position and height to the air traffic control unit, the flight information service unit or the air/ground communication service at the aerodrome (as the case may be) on entering the zone and immediately prior to leaving it.

SECTION 8 LIGHTS AND OTHER SIGNALS TO BE SHOWN OR MADE BY AIRCRAFT

General

46 (1) For the purposes of this Section the horizontal plane of a light shown by an aircraft means the plane which would be the horizontal plane passing through the source of that light if the aircraft were in level flight.

(2) If it is necessary to fit more than one lamp in order to show a light required by this Section because of the physical construction of an aircraft, the lamps shall be so fitted and constructed that, so far as is reasonably practicable, not more than one such lamp is visible from any one point outside the aircraft.

(3) If a light is required by this Section to show through specified angles in the horizontal plane, the lamps giving such light shall be so constructed and fitted that the light is visible:

(a) from any point in any vertical plane within those angles throughout angles of 90° above and below the horizontal plane; but

(b) so far as is reasonably practicable, through no greater angle, either in the horizontal plane or the vertical plane.

(4) If a light is required by this Section to show in all directions, the lamps giving such light shall be so constructed and fitted that, so far as is reasonably practicable, the light is visible from any point in the horizontal plane and on any vertical plane passing through the source of that light.

(5) Notwithstanding the provisions of this Section the commander of an aircraft may switch off or reduce the intensity of any flashing light fitted to the aircraft if such a light does or is likely to:

(a) adversely affect the performance of the duties of any member of the flight crew; or

(b) subject an outside observer to unreasonable dazzle.

Display of lights by aircraft

47 (1) During the night an aircraft shall:

(a) display such of the lights specified in this Section as it is required by this Section; and

(b) subject to rule 49(6), not display any other lights which might obscure or otherwise impair the visibility of, or be mistaken for, such lights.

(2) Subject to rule 48(4) an aircraft fitted with an anti-collision light shall display that light in flight during the day.

(3) A flying machine on a United Kingdom aerodrome shall:

(a) during the night display either the lights which it would be required to display when flying or the lights specified in rule 49(5)(c) unless it is stationary on the apron or on that part of the aerodrome provided for the maintenance of aircraft; and

(b) during the day and night and subject to paragraph (4), display a red anti-collision light, if it is fitted with one, when it is stationary on the apron with engines running.

(4) A helicopter to which article 38 applies may, when stationary on an offshore installation, switch off the anti-collision light required to be shown by paragraph (3)(b) as long as that is done in accordance with a procedure contained in the operations manual of the helicopter as a signal to ground personnel that it is safe to approach the helicopter for the purpose of embarkation or disembarkation of passengers or the loading or unloading of cargo.

Failure of navigation and anti-collision lights

48 (1) Paragraphs (2), (3) and (4) shall apply to aircraft in the United Kingdom.

(2) An aircraft shall not depart from an aerodrome if there is a failure of any light which these Rules require to be displayed at night and the light cannot be immediately repaired or replaced.

(3) Subject to paragraph (4), if the aircraft is in flight and any such light as is referred to in paragraph (2) fails and cannot be immediately repaired or replaced, the aircraft shall land as soon as it can safely do so, unless authorised by the appropriate air traffic control unit to continue its flight.

(4) An aircraft may continue to fly during the day in the event of a failure of an anti-collision light provided the light is repaired at the earliest practicable opportunity.

Flying machines at night

49 (1) Subject to paragraph (6), a flying machine flying at night shall display lights in accordance with paragraphs (2), (3) or (4).

(2) In the case of:

(a) a flying machine registered in the United Kingdom which has a maximum total weight authorised of more than 5,700 kg; or

(b) any other flying machine registered in the United Kingdom which conforms to a type first issued with a type certificate on or after 1st April 1988,

the flying machine shall display the system of lights specified in paragraph 5(b).

(3) A flying machine registered in the United Kingdom which:

(a) conforms to a type first issued with a type certificate before 1st April 1988; and

(b) has a maximum total weight authorised of 5,700 kg or less;

shall display the system of lights specified in:

(i) paragraph (5)(a); or

(ii) paragraph (5)(b); or

(iii) paragraph (5)(d), but excluding sub-paragraph (ii) of that paragraph.

(4) In the case of any other flying machine, one of the systems of lights specified in paragraph (5) shall be displayed.

(5) The systems of lights referred to in paragraphs (2), (3) and (4) are as follows:

(a) A steady green light of at least five candela showing to the starboard side through an angle of 110° from dead ahead in the horizontal plane, a steady red light of at least five candela showing to the port side through an angle of 110° from dead ahead in the horizontal plane; and a steady white light of at least three candela showing through angles of 70° from dead astern to each side in the horizontal plane;

(b) the lights specified in sub-paragraph (a) and an anti-collision light;

(c) the lights specified in sub-paragraph (a), but all being flashing lights (rather than steady lights) flashing together;

(d) the lights specified in sub-paragraph (a), but all being flashing lights (rather than steady lights) flashing together in alternation with one or both of the following:

(i) a flashing white light of at least twenty candela showing in all directions;

(ii) a flashing red light of at least twenty candela showing through angles of 70° from dead astern to each side in the horizontal plane.

(6) If the lamp showing either the red or the green light specified in paragraph (5)(a) is fitted more than 2 metres from the wing tip, another lamp may be fitted at the wing tip to indicate its position showing a steady light of the same colour through the same angle.

Gliders at night

50 A glider flying at night shall display either a steady red light of at least five candela, showing in all directions, or lights in accordance with rule 49(5) and (6).

Free balloons at night

51 A free balloon flying at night shall display a steady red light of at least five candela showing in all directions, suspended not less than 5 metres and not more than 10 metres below the basket, or if there is no basket, below the lowest part of the balloon.

Captive balloons and kites at night

52 (1) A captive balloon or kite flying at night at a height exceeding 60 metres above the surface shall display lights in accordance with paragraphs (2), (3) and (4).

(2) A group of two steady lights shall be displayed consisting of a white light placed 4 metres above a red light, both being of at least five candela and showing in all directions, the white light being placed not less than 5 metres nor more than 10 metres below the basket or, if there is no basket, below the lowest part of the balloon or kite.

(3) On the mooring cable of the balloon or kite, at intervals of not more than 300 metres measured from the group of lights specified in paragraph (2), there shall be displayed:

(a) groups of two lights of the colour and power and in the relative positions specified in paragraph (2); and

(b) if the lowest group of lights is obscured by cloud, an additional group of such lights below the cloud base.

(4) On the surface of the ground there shall be displayed a group of three flashing lights arranged:

(a) in a horizontal plane at the apexes of a triangle, approximately equilateral, each side of which measures at least 25 metres;

(b) so that one side of the triangle shall be approximately at right angles to the horizontal projection of the cable and shall be delimited by two red lights; and

(c) so that the third light shall be a green light, placed so that the triangle encloses the object on the surface to which the balloon or kite is moored.

Captive balloons and kites by day

53 (1) A captive balloon flying by day at a height exceeding 60 metres above the surface shall have attached to its mooring cable tubular streamers which are:

(a) not less than 40 centimetres in diameter and 2 metres in length; and

(b) marked with alternate bands of red and white 50 centimetres wide at intervals of not more than 200 metres measured from the basket or, if there is no basket, from the lowest part of the balloon.

(2) A kite flying by day at a height exceeding 60 metres above the surface shall have attached to its mooring cable either:

(a) tubular streamers as specified in paragraph (1); or

(b) at intervals of not more than 100 metres measured from the lowest part of the kite, streamers not less than 80 centimetres long and 30 centimetres wide at their widest point, marked with alternate bands of red and white 10 centimetres wide.

Airships at night

54 (1) Except as provided in paragraph (2), an airship flying at night shall display the following lights:

(a) a steady white light of at least five candela showing through angles of 110° from dead ahead to each side in the horizontal plane;

(b) a steady green light of at least five candela showing to the starboard side through an angle of 110° from dead ahead in the horizontal plane;

(c) a steady red light of at least five candela showing to the port side through an angle of 110° from dead ahead in the horizontal plane;

(d) a steady white light of at least five candela showing through angles of 70° from dead astern to each side in the horizontal plane; and

(e) an anti-collision light.

(2) Subject to paragraph (5), an airship flying at night in any of the circumstances referred to in paragraph (3) shall display the lights specified in paragraph (4).

(3) The circumstances are as follows:

(a) if the airship is not under command; or

(b) has voluntarily stopped its engines, or

(c) is being towed.

(4) The lights specified are the following lights:

(a) the white lights specified in paragraph (1)(a) and (d);

(b) two steady, red lights, each of at least five candela, showing in all directions, suspended below the control car so that one is at least 4 metres above the other and at least 8 metres below the control car; and

(c) if the airship is making way but not otherwise, the green and red lights specified in paragraph (1)(b) and (c).

(5) An airship picking up its moorings at night shall display the lights specified in paragraph (1).

(6) An airship moored to a mooring mast within the United Kingdom at night shall display, at or near the rear of the airship, a steady, white light of at least five candela showing in all directions.

(7) An airship moored otherwise than to a mooring mast within the United Kingdom at night shall display:

(a) a white light of at least five candela showing through angles of 110° from dead ahead to each side in the horizontal plane; and

(b) a white light of at least five candela showing through angles of 70° from dead astern to each side in the horizontal plane.

Airships by day

55 (1) An airship flying during the day in any of the circumstances referred to in paragraph (2) shall display two black balls suspended below the control car so that one is at least 4 metres above the other and at least 8 metres below the control car.

(2) The circumstances are as follows:

(a) if the airship is not under command;

(b) if it has voluntarily stopped its engines; or

(c) if it is being towed.

(3) For the purposes of this rule and rule 54:

(a) an airship shall be deemed not to be under command when it is unable to execute a manoeuvre which it may be required to execute by these Rules; and

(b) an airship shall be deemed to be making way when it is not moored and is in motion.

SECTION 9 AERODROME SIGNALS AND MARKINGS – VISUAL AND AURAL SIGNALS

General

56 (1) Within the United Kingdom any signal or marking which is specified in this Section and which is given or displayed:

(a) by any person in an aircraft; or

(b) at an aerodrome; or

(c) at any other place which is being used by aircraft for landing or take-off,

shall have the meaning assigned to it in this Section.

(2) Apart from those referred to in rule 60(6) and the distances at which markings must be placed, all dimensions of signals or markings specified in this Section of these Rules shall be subject to a tolerance of 10 per cent, plus or minus.

Signals in the signals area

57 (1) Whenever any signal specified in this rule is displayed it shall be placed in a signals area, which shall be a square visible from all directions bordered by a white strip 30 centimetres wide and with the internal sides measuring 12 metres.

(2) A white landing T, as illustrated in this paragraph,

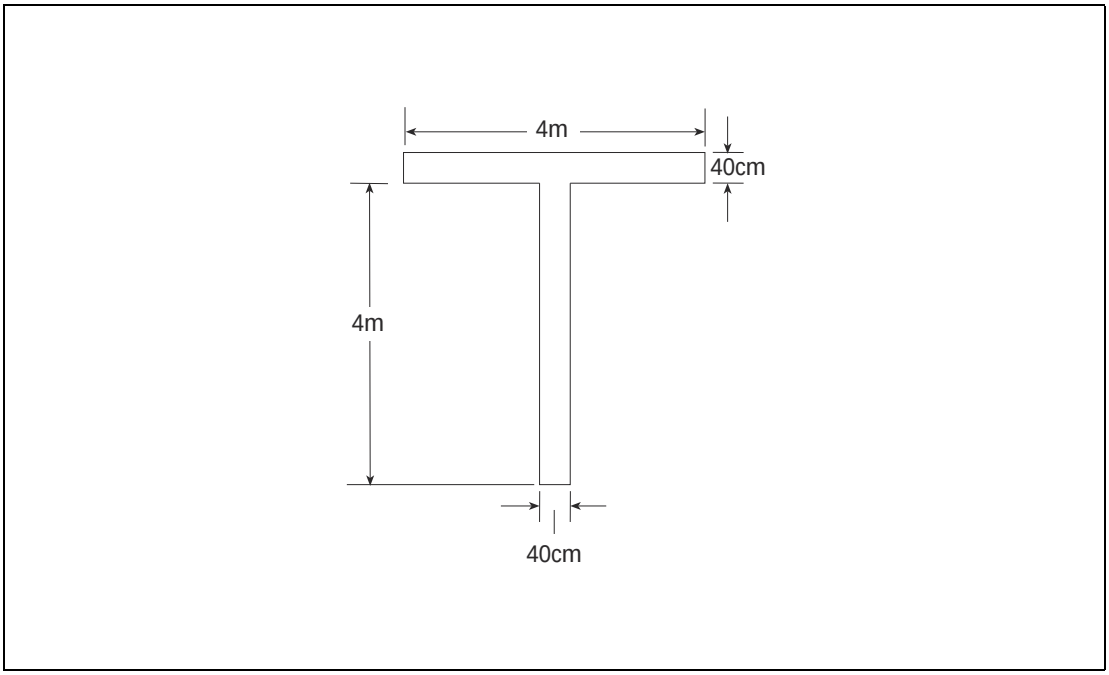

Figure 1

signifies that aeroplanes and gliders taking off or landing shall do so in a direction parallel with the shaft of the T and towards the cross arm, unless otherwise authorised by the appropriate air traffic control unit.

(3) A white disc 60 centimetres in diameter displayed alongside the cross arm of the T and in line with the shaft of the T, as illustrated in this paragraph,

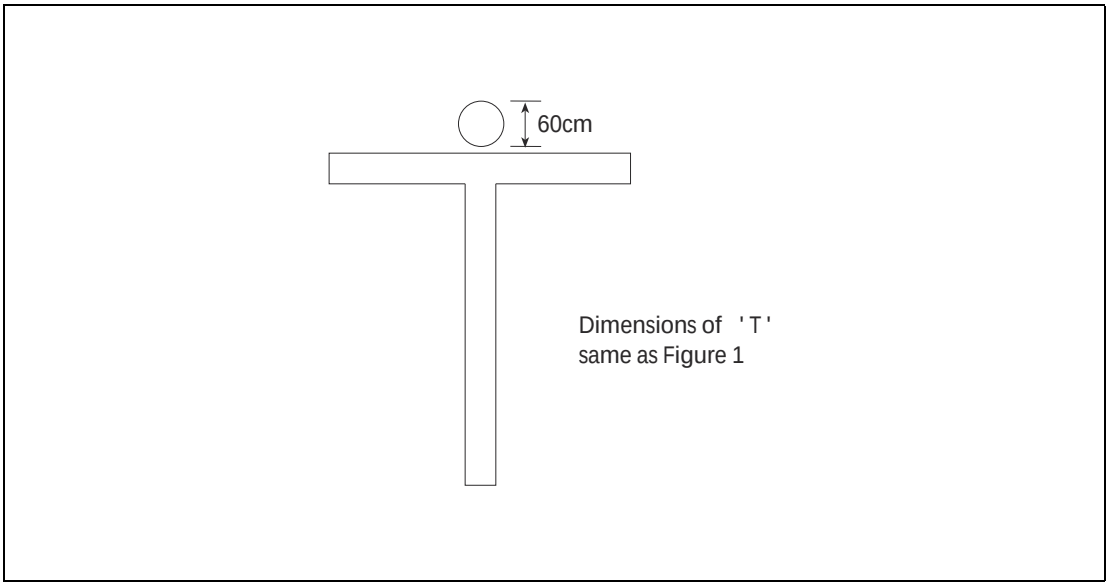

Figure 2

signifies that the direction of landing and take-off do not necessarily coincide.

(4) A white dumb-bell, as illustrated in this paragraph,

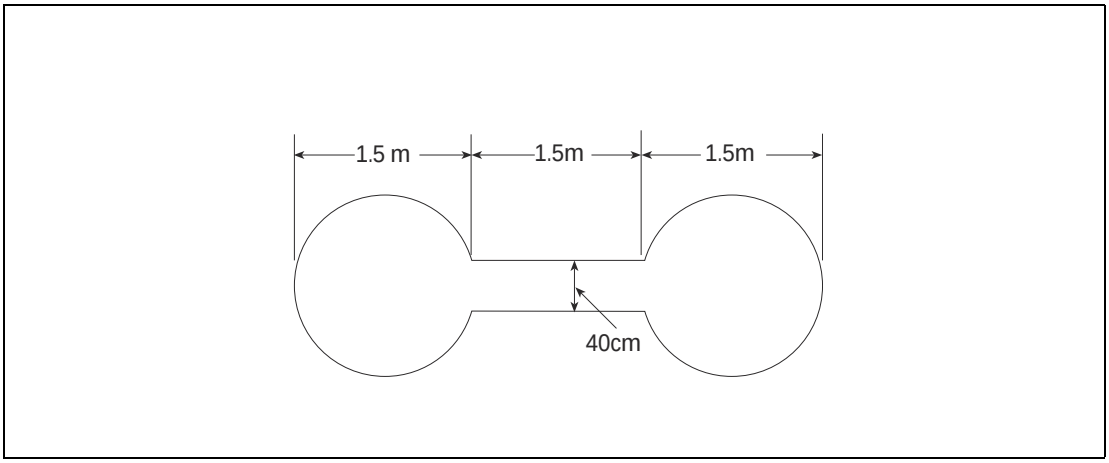

Figure 3

signifies that movements of aeroplanes and gliders on the ground shall be confined to paved, metalled or similar hard surfaces.

A white dumb-bell as described in (4) above but with a black strip 60 centimetres wide across each disc at right angles to the shaft of the dumb-bell, as illustrated in this paragraph,

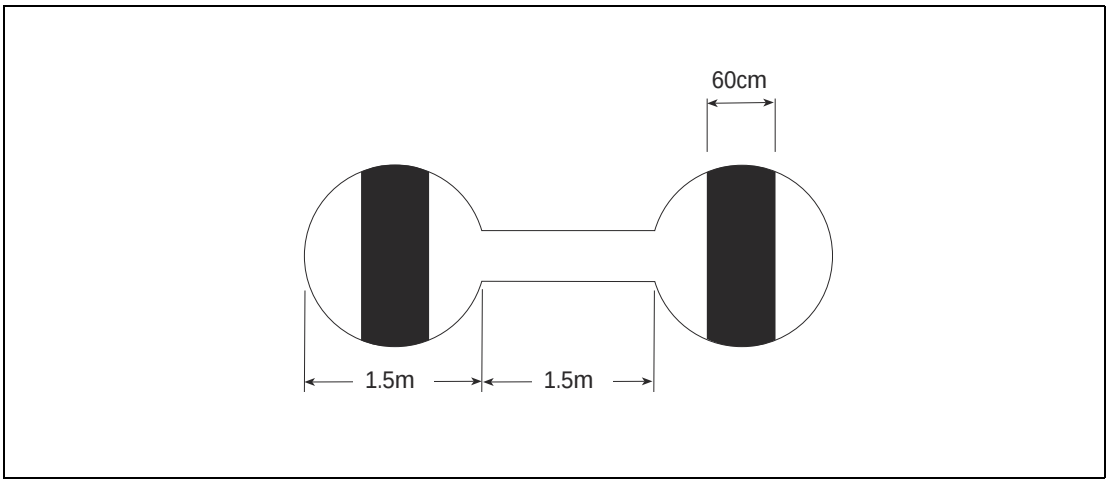

Figure 4

signifies that aeroplanes and gliders taking off or landing shall do so on a runway but that movement on the ground is not confined to paved, metalled or similar hard surfaces.

(5) A red and yellow striped arrow, as illustrated in this paragraph,

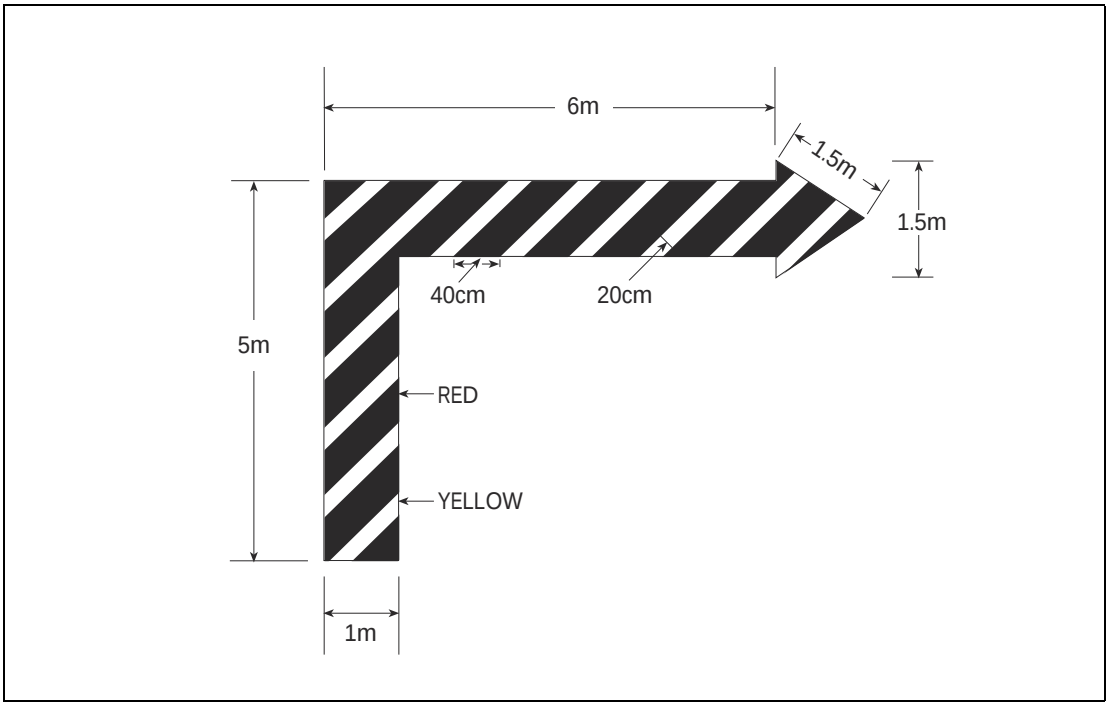

Figure 5

the shaft of which is one metre wide placed along the whole or a total of 11 metres of two adjacent sides of the signals area and pointing in a clockwise direction signifies that a righthand circuit is in force.

(6) A red panel 3 metres square with a yellow strip along one diagonal 50 centimetres wide, as illustrated in this paragraph,

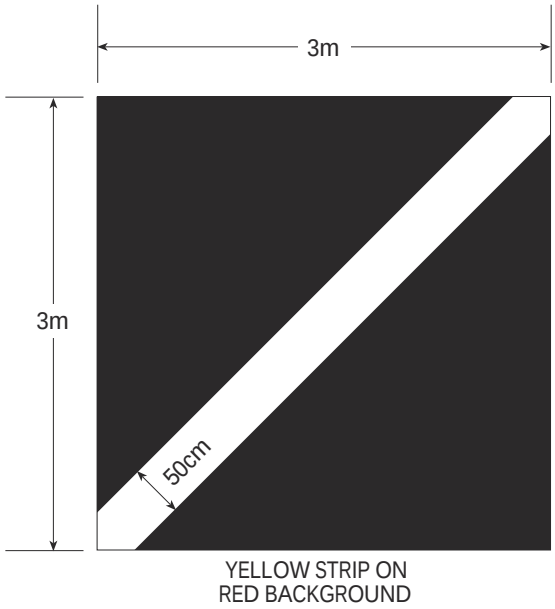

Figure 6

signifies that the state of the manoeuvring area is poor and pilots must exercise special care when landing.

(7) A red panel 3 metres square with a yellow strip, 50 centimetres wide, along each diagonal, as illustrated in this paragraph,

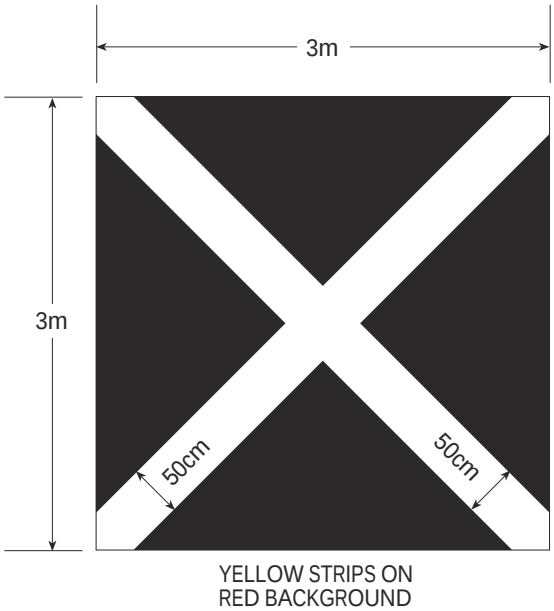

Figure 7

signifies that the aerodrome is unsafe for the movement of aircraft and that landing on the aerodrome is prohibited.

(8) A white letter H, as illustrated in this paragraph,

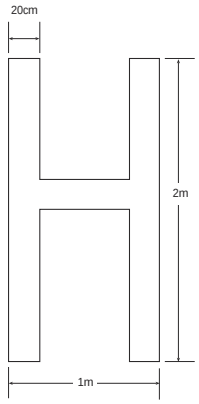

Figure 8

signifies that helicopters shall take off and land only within the area designated by the marking specified in rule 59(7).

(9) A red letter L displayed on the dumb-bell specified in paragraphs (4) and (5), as illustrated in this paragraph,

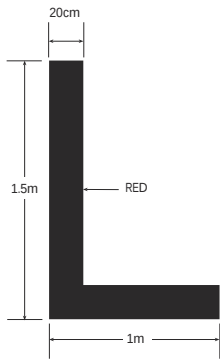

Figure 9

signifies that light aircraft are permitted to take off and land either on a runway or on the area designated by the marking specified in rule 59(8).

(10) A white double cross, as illustrated in this paragraph,

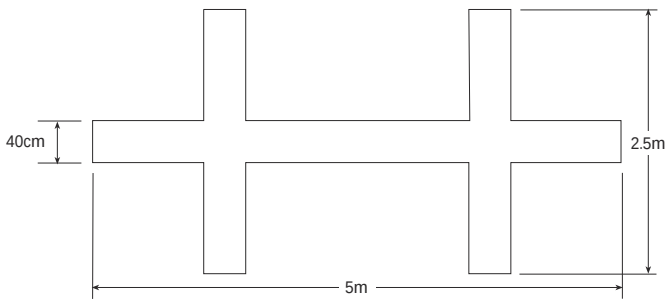

Figure 10

signifies that glider flying is in progress.

Markings for paved runways and taxiways

58 (1) Two or more white crosses, as illustrated in this paragraph,

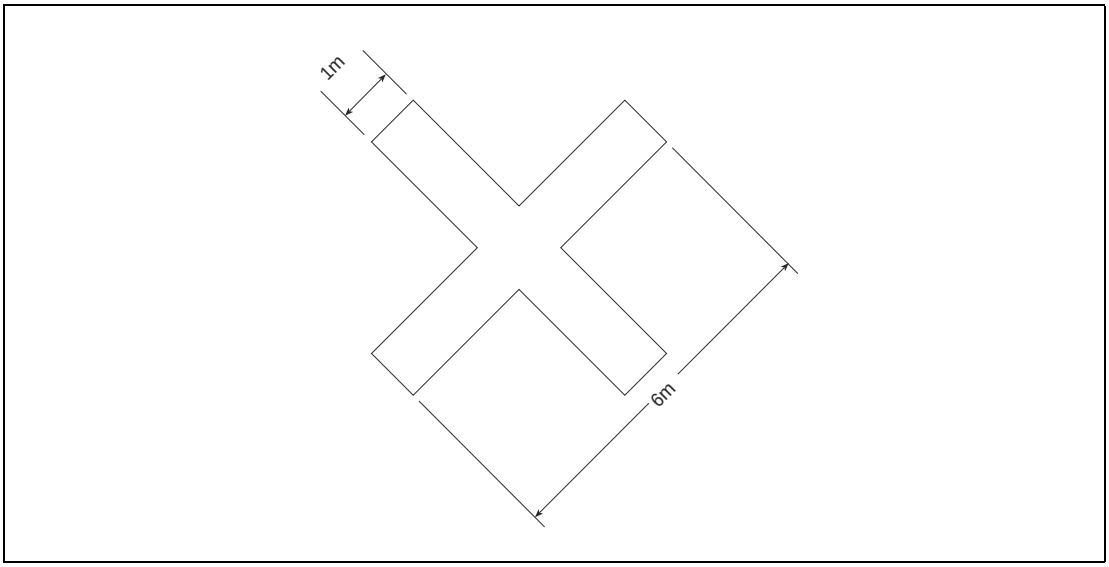

Figure 11

displayed on a runway or taxiway, with the arms of the crosses at an angle of 45° to the centre line of the runway, at intervals of not more than 300 metres signify that the section of the runway or taxiway marked by them is unfit for the movement of aircraft.

(2) Subject to paragraph (3), two yellow broken lines and two continuous lines, as illustrated in this paragraph,,

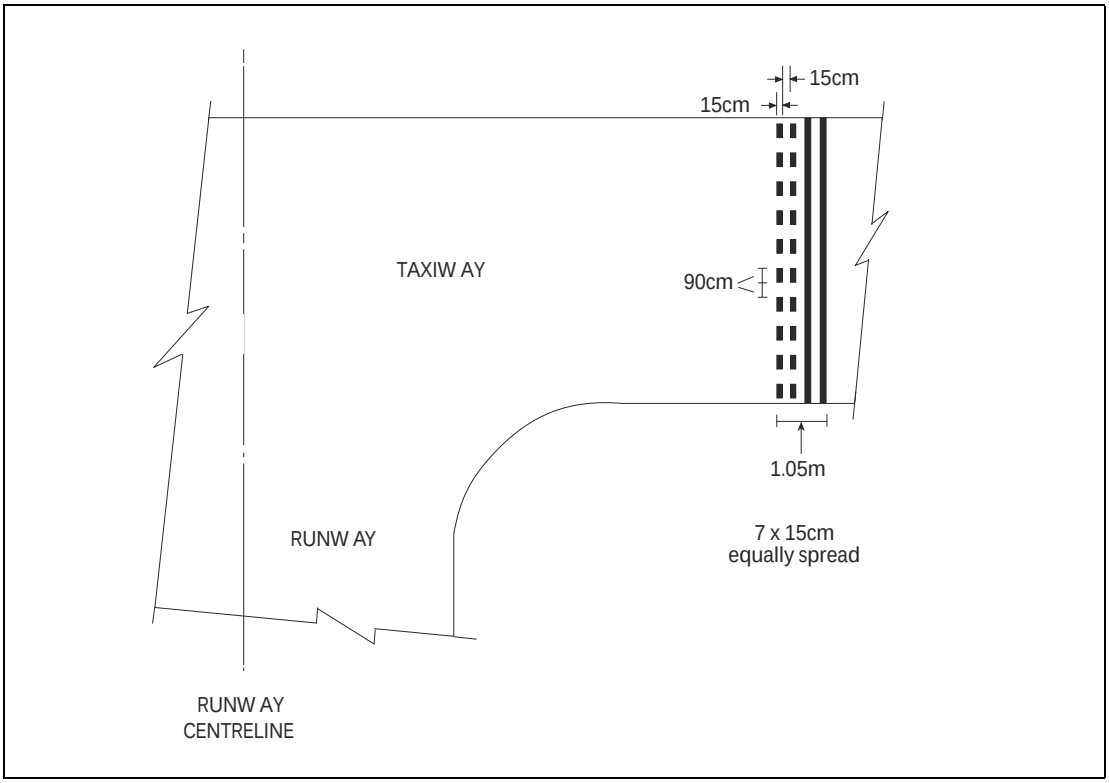

Figure 12(a)

signify the designated visual holding position associated with a runway beyond which no part of a flying machine or vehicle shall project in the direction of the runway without permission from the air traffic control unit at the aerodrome during the notified hours of watch of that unit.

(3) Outside the notified hours of watch of that unit or where there is no air traffic control unit at the aerodrome the markings referred to in paragraph (2) signify the position closest to the runway beyond which no part of a flying machine or vehicle shall project in the direction of the runway when the flying machine or vehicle is required by virtue of rule 42(3) to give way to aircraft which are taking off from or landing on that runway.

* (4) Subject to paragraph (5), a yellow marking, as illustrated in this paragraph,

* SI 2009/2169

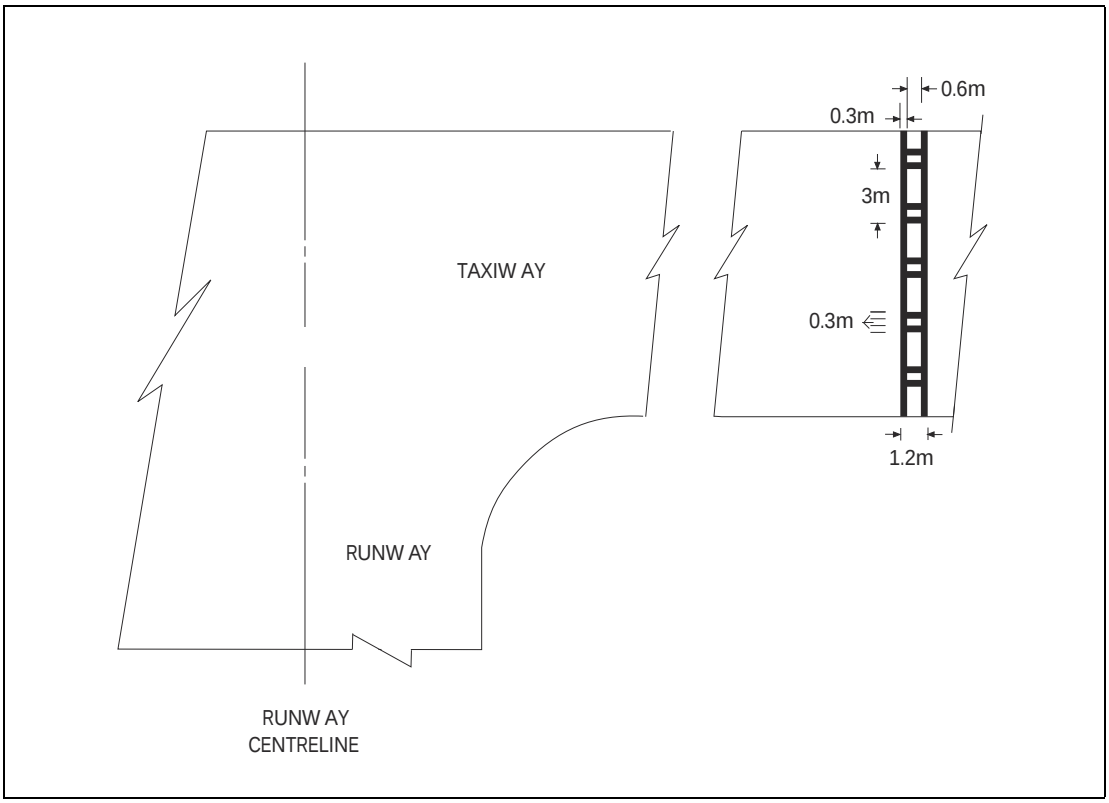

Figure 12(b)

signifies a holding position other than that closest to the runway beyond which no part of a flying machine or vehicle shall project in the direction of the runway without permission from the air traffic control unit at the aerodrome during the notified hours of watch of that unit.

* (5) Outside the notified hours of watch of that unit or where there is no air traffic control unit at the aerodrome the marking referred to in paragraph (4) may be disregarded.

* (6) Orange and white markers, as illustrated in this paragraph,

* SI 2009/2169

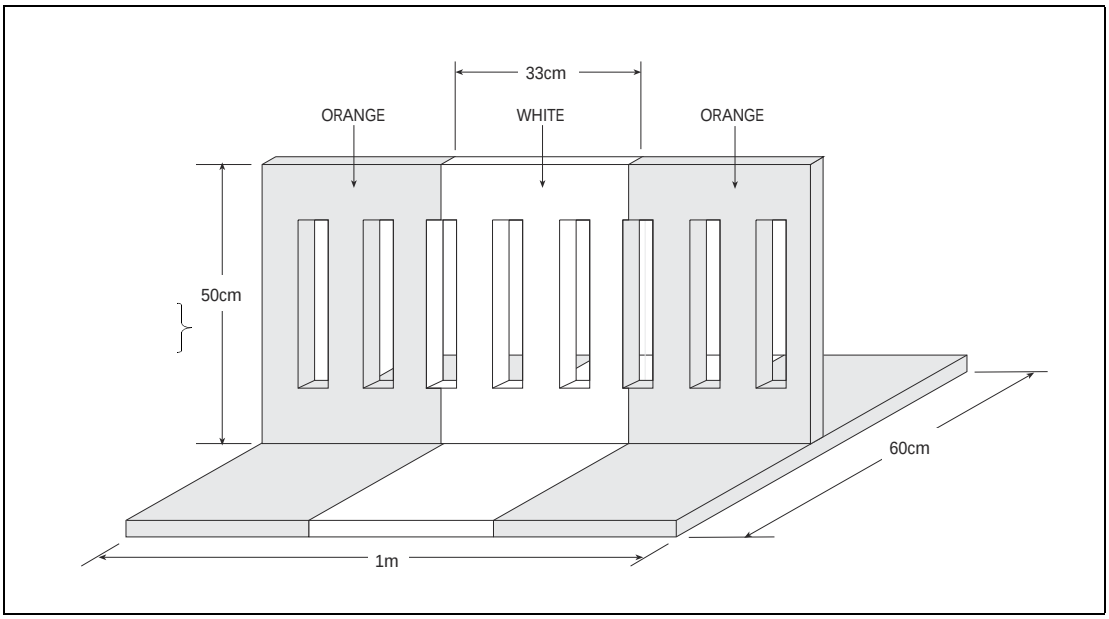

Figure 13

spaced not more than 15 metres apart, signify the boundary of that part of a paved runway, taxiway or apron which is unfit for the movement of aircraft.

Markings on unpaved manoeuvring areas

59 (1) Markers with orange and white stripes of an equal width of 50 centimetres, with an orange stripe at each end, alternating with flags 60 centimetres square showing equal orange and white triangular areas, spaced not more than 90 metres apart as illustrated in this paragraph,

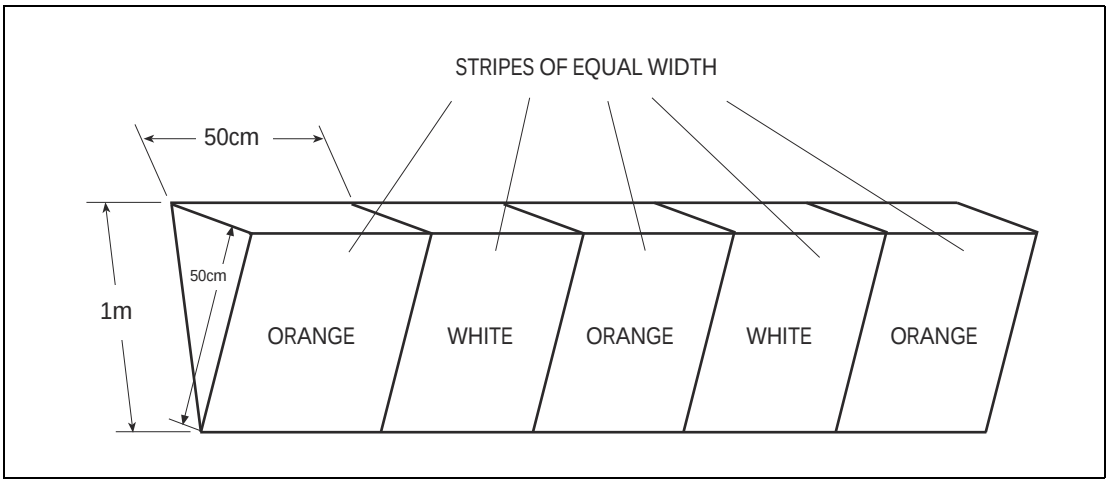

Figure 14

indicate the boundary of an area unfit for the movement of aircraft.

(2) One or more white crosses, as specified in rule 58(1), also indicate such an area as is referred to in paragraph (1).

(3) Striped markers, as specified in paragraph (1), spaced not more than 45 metres apart, indicate the boundary of an aerodrome.

(4) On structures markers with orange and white vertical stripes, of an equal width of 50 centimetres, with an orange stripe at each end, spaced not more than 45 metres apart, as illustrated in this paragraph.,

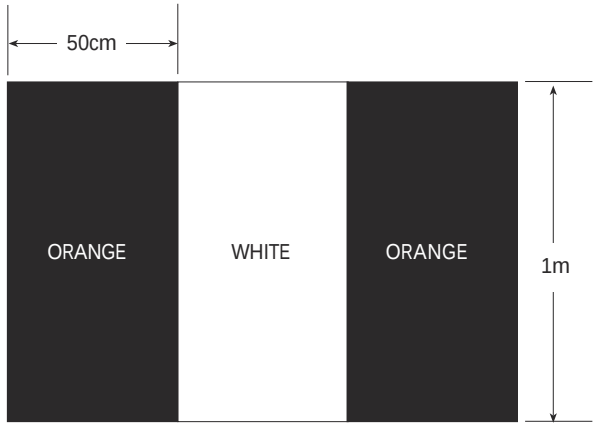

Figure 15

indicate the boundary of an aerodrome.

(5) The pattern of the marker referred to in paragraph (4) shall be visible from inside and outside the aerodrome and the marker shall be affixed not more than 15 centimetres from the top of the structure.

(6) White, flat, rectangular markers 3 metres long and 1 metre wide, at intervals not exceeding 90 metres, flush with the surface of an unpaved runway or stopway, indicate the boundary of the unpaved runway or stopway.

(7) A white letter H, as illustrated in this paragraph,

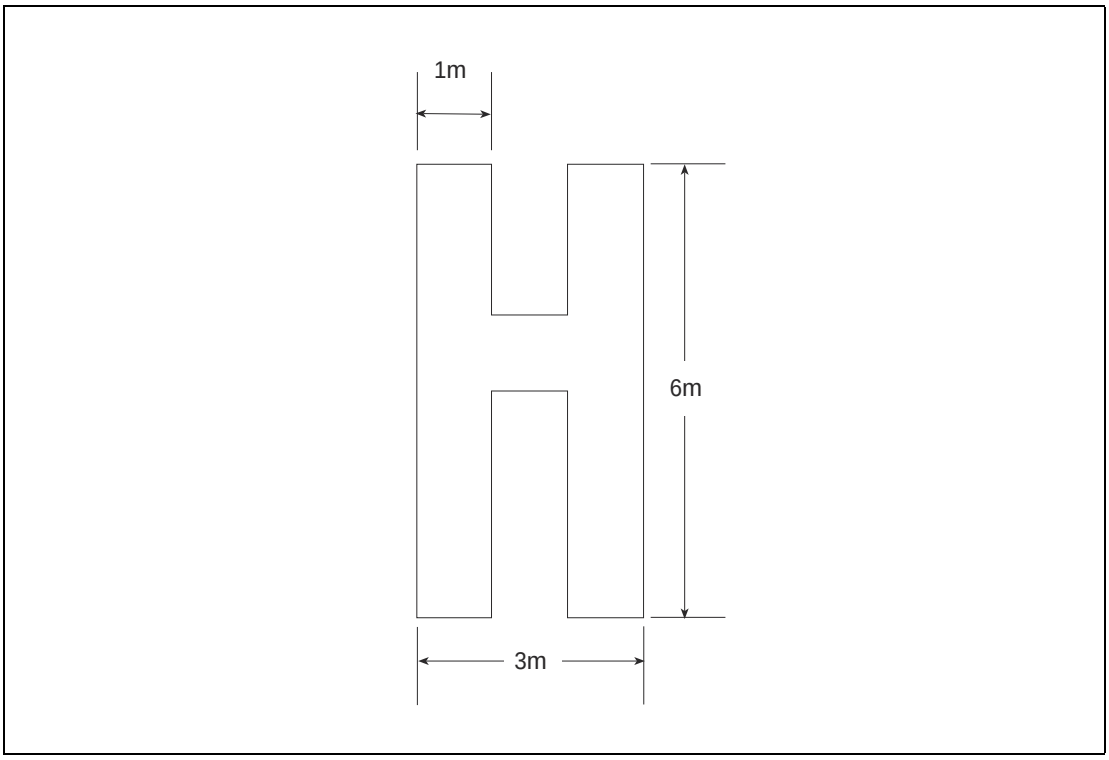

Figure 16

indicates an area which shall be used only for the taking off and landing of helicopters.

(8) A white letter L, as illustrated in this paragraph,

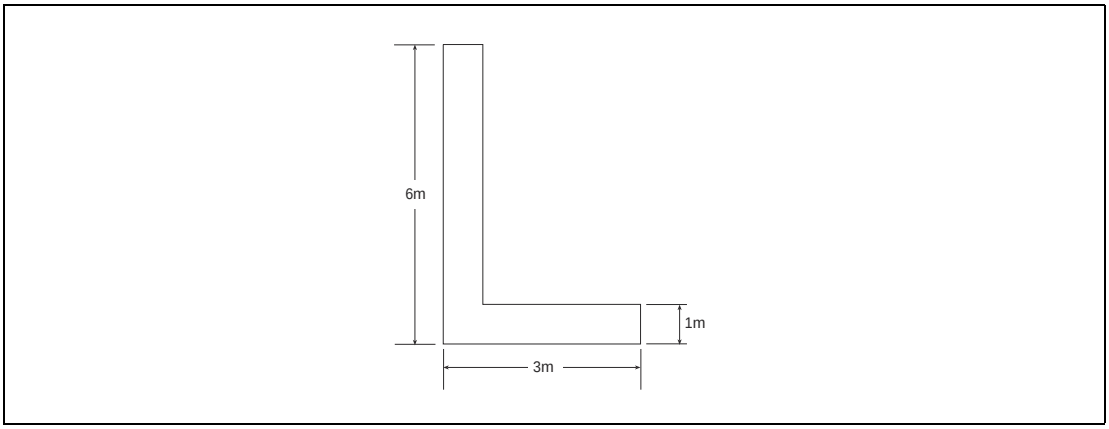

Figure 17

indicates a part of the manoeuvring area which shall be used only for the taking off and landing of light aircraft.

(9) A yellow cross with two arms each 6 metres long by 1 metre wide at right angles, indicates that tow ropes, banners and similar articles towed by aircraft shall only be picked up and dropped in the area in which the cross is placed.

(10) A white double cross, as illustrated in this paragraph,

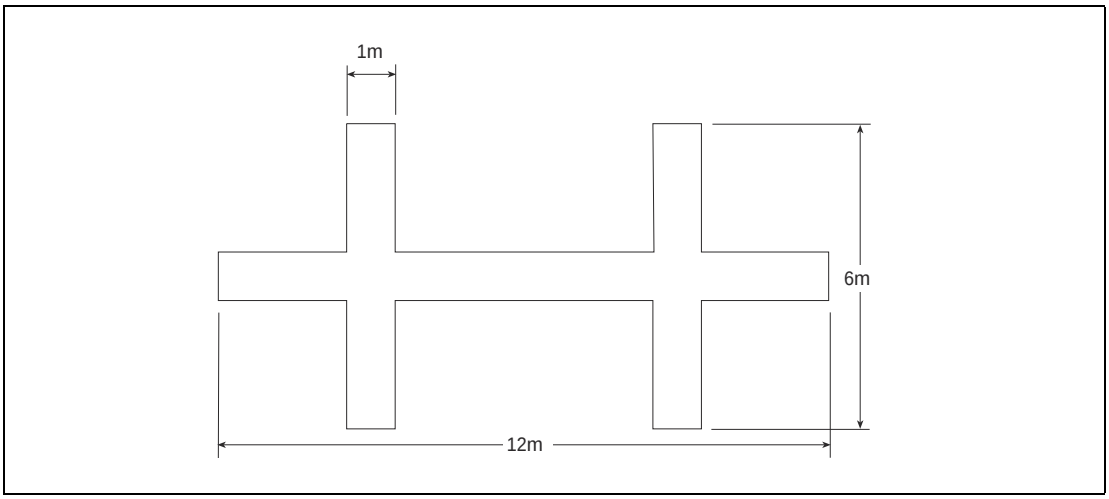

Figure 18

indicates an area which shall be used only for the taking off and landing of gliders.

(11) Subject to paragraph (12) a white landing T, as specified in rule 57(2), placed at the left-hand side of the runway (when viewed from the direction of landing) indicates the runway to be used for take-off and landing.

(12) The white landing T referred to in paragraph (11), when placed at an aerodrome with no runway, indicates the direction for take-off and landing.

Signals visible from the ground

60 (1) A black ball 60 centimetres in diameter suspended from a mast signifies that the directions of take-off and landing are not necessarily the same.

(2) A chequered flag or board, 1.2 metres by 90 centimetres, containing 12 equal squares, 4 horizontally and 3 vertically, coloured red and yellow alternately, signifies that aircraft may move on the manoeuvring area and apron only in accordance with the permission of the air traffic control unit at the aerodrome.

(3) Two red balls, 60 centimetres in diameter, positioned vertically one above the other, 60 centimetres apart and suspended from a mast, signify that glider flying is in progress at the aerodrome.

(4) Black, Arabic numerals in two-figure groups and, where parallel runways are provided, the letter or letters L (left), LC (left centre), C (centre), RC (right centre) and R (right), placed against a yellow background, indicate the direction for take-off or the runway in use.

(5) A black letter C against a yellow background, as illustrated in this paragraph,

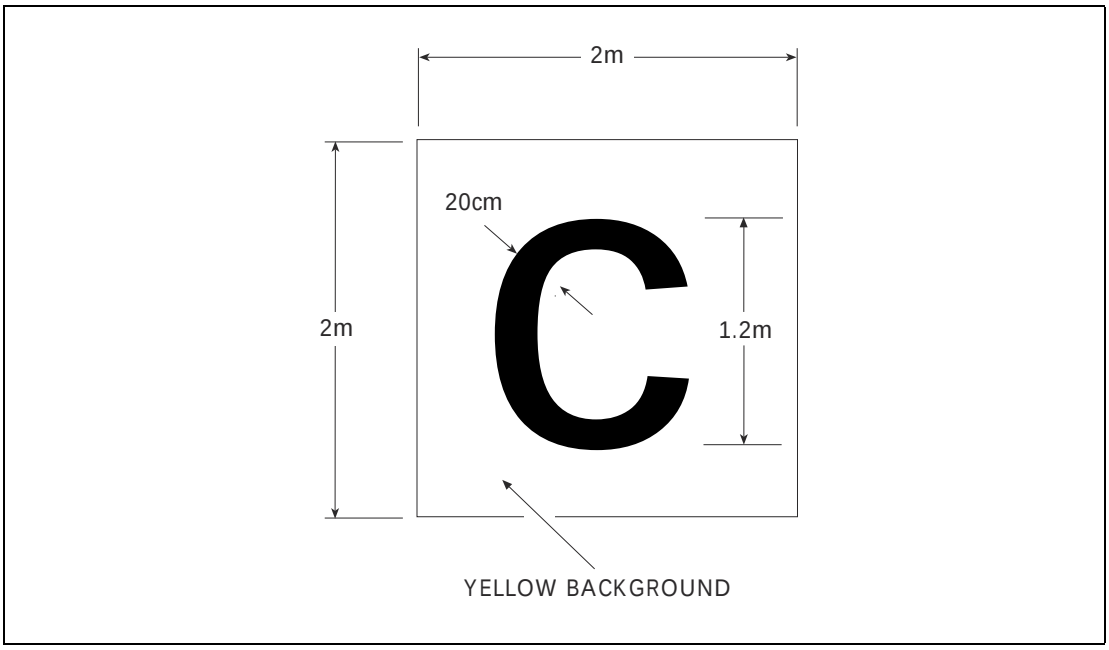

Figure 19

indicates the position at which a pilot can report to the air traffic control unit or to the person in charge of the aerodrome.

(6) A rectangular green flag of not less than 60 centimetres square and not more than 66 centimetres square, flown from a mast, indicates that a right-hand circuit is in force.

Lights and pyrotechnic signals for control of aerodrome traffic

61 Each signal described in column 1 of Table 4 shall have the meanings respectively appearing in columns 2, 3 and 4 of the Table in the circumstances specified in the second row of the Table.

Table 4 MEANING OF LIGHTS AND PYROTECHNIC SIGNALS

Column 1	Column 2	Column 3	Column 4
Characteristic and colour of light beam or pyrotechnic	Directed from an aerodrome to an aircraft in flight	Directed from an aerodrome To an aircraft or vehicle on the aerodrome	Directed from an aircraft in flight to an aerodrome
(a) Continuous red light	Give way to other aircraft and continue circling.	Stop	–
(b) Red pyrotechnic light, or red flare	Do not land; wait for permission.	–	Immediate assistance is requested.
(c) Red flashes	Do not land; aerodrome not available for landing.	Move clear of landing area.	–
(d) Green flashes	Return to aerodrome; wait for permission to land.	To an aircraft: You may move on the manoeuvring area and apron; To a vehicle: You may move on the manoeuvring area.	–
(e) Continuous green light	You may land.	You may take-off (not applicable to a vehicle).	–
(f) Continuous green light, or green flashes, or green pyrotechnic light		–	By night: May I land? By day: May I land in direction different from that indicated by landing T?
(g) White flashes.	Land at this aerodrome after receiving continuous green light, and then, after receiving green flashes, proceed to the apron.	Return to starting point on the aerodrome.	I am compelled to land.
(h) White pyrotechnic lights. Switching on and off the navigation lights. Switching on and off the landing lights.	–	–	I am compelled to land.

Marshalling signals (from a marshaller to an aircraft)

62 (1) Each of the signals for the guidance of aircraft manoeuvring on or off the ground, described in column 1 of Table 5 and as illustrated in column 3, when given by a marshaller to an aircraft, shall have the meanings specified in column 2 of the Table.

(2) By day any such signals shall be given by hand or by circular bats and by night shall be given by torches or by illuminated wands.

Table 5 MEANING OF MARSHALLING SIGNALS (RULE 62)

Column 1	Column 2	Column 3
Description of Signal	Meaning of Signal	Illustration of signal
1. Raise right hand above head level with wand pointing up; move left-hand wand pointing down toward body.	Wingwalker/guide -This signal provides an indication by a person positioned at the aircraft wing tip, to the pilot/ marshaller/ push-back operator, that the aircraft movement on/ off a parking position would be unobstructed	
2. Raise fully extended arms straight above head with wands pointing up.	Identify gate	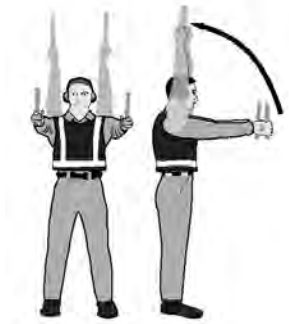
3. Point both arms upward, move and extend arms outward to sides of body and point with wands to direction of next signalman or taxi area.	Proceed to next signalman or as directed by tower/ground control.	
4. Bend extended arms at elbows and move wands up and down from chest height to head.	Straight ahead	

Table 5 MEANING OF MARSHALLING SIGNALS (RULE 62) (Continued)

Column 1	Column 2	Column 3
Description of Signal	Meaning of Signal	Illustration of signal
5(a) With right arm and wand extended at a 90-degree angle to body, make "come ahead" signal with left hand. The rate of signal motion indicates to pilot the rate of aircraft turn.	Turn left (from pilot's point of view)	
5(b) With left arm and wand extended at a 90-degree angle to body, make "come ahead" signal with right hand. The rate of signal motion indicates to pilot the rate of aircraft turn.	Turn right (from pilot's point of view)	
6(a) Fully extend arms and wands at a 90-degree angle to sides and slowly move to above head until wands cross.	Normal stop	
6(b) Abruptly extend arms and wands to top of head, crossing wands.	Emergency stop	

Table 5 MEANING OF MARSHALLING SIGNALS (RULE 62) (Continued)

Column 1	Column 2	Column 3
Description of Signal	Meaning of Signal	Illustration of signal
7(a) Raise hand just above shoulder height with open palm. Ensuring eye contact with flight crew, close hand into a fist. Do Not move until receipt of "thumbs up" acknowledgement from flight crew.	Set brakes	
7(b) Raise hand just above shoulder height with hand closed in a fist. Ensuring eye contact with flight crew, open palm. Do not move until receipt of "thumbs up" acknowledgement from crew.	Release brakes	
8(a) With arms and wands fully extending above head, move wands inwards in a "jabbing" motion until wands touch. Ensure acknowledgement is received from flight crew.	Chocks inserted	
8(b) With arms and wands fully extended above head, move wands outward in "jabbing" motion. Do not remove chocks until authorised by crew.	Chocks removed	

Table 5 MEANING OF MARSHALLING SIGNALS (RULE 62) (Continued)

Column 1	Column 2	Column 3
Description of Signal	Meaning of Signal	Illustration of signal
9. Raise right arm to head level with wand pointing up and start a circular motion with hand; at the same time, with left arm raised above head level, point to engine to be started.	Start engine(s)	
10. Extend arm with wand forward of body at shoulder level; move hand and want to top of left shoulder and draw wand to top of right shoulder in a slicing motion across throat.	Cut engine(s)	
11. Move extended arms downwards in a "patting" gesture, moving wands up and down from waist to knees.	Slow down	
12. With arms down and wands toward ground, wave either right or left wand up and down indicating engine(s) on left or right side respectively should be slowed down.	Slow down engine(s) on indicated side	

Table 5 MEANING OF MARSHALLING SIGNALS (RULE 62) (Continued)

Column 1	Column 2	Column 3
Description of Signal	Meaning of Signal	Illustration of signal
13. With arms in front of body at waist height, rotate arms in a forward motion. To stop rearward movement, use signal 6(a) or 6(b).	Move Back	
14(a) Point left arm with wand down and bring right arm from overhead vertical position to horizontal forward position, repeating right-arm movement.	Turns while backing (for tail to starboard)	
14(b) Point right arm with wand down and bring left arm from overhead vertical position to horizontal position, repeating left-arm movement.	Turns while backing (for tail to port)	
15. Raise right arm to head level with wand pointing up or display hand with "thumbs up"; left arm remains at side by knee.	Affirmative/all clear - This signal is also used as a technical/ servicing communication signal.	

Table 5 MEANING OF MARSHALLING SIGNALS (RULE 62) (Continued)

Column 1	Column 2	Column 3
Description of Signal	Meaning of Signal	Illustration of signal
16. Fully extend arms and wands at a 90-degree angle to sides.	Hover.	
17. Fully extend arms and wands at a 90-degree angle to sides and, with palms turned up, move hands upwards. Speed of movement indicates rate of ascent.	Move upwards.	
18. Fully extend arms and wands at a 90-degree angle to sides and, with palms turned down, move hands downwards. Speed of movement indicates rate of descent.	Move downwards.	
19(a) Extend arm horizontally at a 90-degree angle to right side of body. Move other arm in same direction in a sweeping motion.	Move horizontally left (from pilot's point of view).	

Table 5 MEANING OF MARSHALLING SIGNALS (RULE 62) (continued)

Column 1	Column 2	Column 3
Description of Signal	Meaning of Signal	Illustration of signal
19(b) Extend arm horizontally at a 90-degree angle to left side of body. Move other arm in same direction in a sweeping motion.	Move horizontally right (from pilot's point of view).	
20. Cross arms with wands downwards and in front of body.	Land.	
21. Move right-hand wand in a "fanning" motion from shoulder to knee, while at the same time pointing with left-hand wand to area of fire.	Fire.	
22. Fully extend arms and wands downwards at a 45-degree angle to sides. Hold position until aircraft is clear for next manoeuvre.	Hold position/stand by.	

Table 5 MEANING OF MARSHALLING SIGNALS (RULE 62) (Continued)

Column 1	Column 2	Column 3
Description of Signal	Meaning of Signal	Illustration of signal
23. Perform a standard salute with right hand and/or wand to dispatch the aircraft. Maintain eye contact with flight crew until aircraft has begun to taxi.	Dispatch aircraft.	
24. Extend right arm fully above head and close fist or hold wand in horizontal position; left arm remains at side by knee.	Do not touch controls (technical/servicing communication signal).	
25. Hold arms fully extended above head, open left hand horizontally and move finger tips of right hand into a touch open palm of left hand (forming a "T"). At night, illuminated wands can also be used to form the "T" above head.	Connect ground power (technical/servicing communication signal).	
26. Hold arms fully extended above head with finger tips of right hand touching open horizontal palm of left hand (forming a "T"); then move right hand away from the left. Do not disconnect power until authorised by flight crew. At night illuminated wands can also be used to form the "T" above head.	Disconnect power (technical/ servicing communication signal).	

Table 5 MEANING OF MARSHALLING SIGNALS (RULE 62) (Continued)

Column 1	Column 2	Column 3
Description of Signal	Meaning of Signal	Illustration of signal
27. Hold right arm straight out at 90 degrees from shoulder and point wand down to ground or display hand with "thumbs down"; left hand remains at side by knee.	Negative (technical/servicing communication signal).	
28. Extend both arms at 90 degrees from body and move hands to cup both ears.	Establish communication via interphone (technical/servicing communication signal).	
29. With right arm at side and left arm raised above head at a 45-degree angle, move right arm in a sweeping motion towards top of left shoulder.	Open/close stairs (technical/ servicing communication signal)-This signal is intended mainly for aircraft with the set of integral stairs at the front	

Marshalling signals (from a pilot of an aircraft to a marshaller)

63 Each of the signals described in column 1 of Table 6, when made by a pilot in an aircraft to a marshaller on the ground, shall have the meanings specified in column 2 of the Table:

Table 6 Meaning of Marshalling Signals (from a pilot of an aircraft to a marshaller)

Column 1	Column 2
Description of Signal	**Meaning of Signal**
(1) Raise arm and hand with fingers extended horizontally in front of face, then clench fist.	Brakes engaged.
(2) Raise arm with fist clenched horizontally in front of face, then extend fingers.	Brakes released.
(3) Arms extended palms facing outwards, move hands inwards to cross in front of face.	Insert chocks.
(4) Hands crossed in front of face, palms facing outwards, move arms outwards.	Remove chocks.
(5) Raise the number of fingers on one hand indicating the number of the engine to be started. For this purpose the aircraft engines shall be numbered in relation to the marshaller facing the aircraft, from his right to his left, for example, No. 1 engine shall be the port outer engine, No. 2 engine shall be the port inner engine, No. 3 engine shall be the starboard inner engine, and No. 4 engine shall be the starboard outer engine.	Ready to start engines.

Distress, urgency and safety signals

64 (1) The following signals, given either together or separately before the sending of a message, signify that an aircraft is threatened by grave and imminent danger and requests immediate assistance:

(a) by radiotelephony:

the spoken word 'MAYDAY';

(b) visual signalling:

(i) the signal SOS (... - - -...);

(ii) a succession of pyrotechnic lights fired at short intervals each showing a single red light;

(iii) a parachute flare showing a red light;

(c) by sound signalling other than radiotelephony:

(i) the signal SOS (...- - -...);

(ii) a continuous sounding with any sound apparatus.

(2) The following signals, given either together or separately, before the sending of a message, signify that the commander of the aircraft wishes to give notice of difficulties which compel it to land but that he does not require immediate assistance:

(a) a succession of white pyrotechnic lights;

(b) the repeated switching on and off of the aircraft landing lights;

(c) the repeated switching on and off of its navigation lights, in such a manner as to be clearly distinguishable from the flashing navigation lights described in rule 49.

(3) The following signals, given either together or separately, indicate that the commander of the aircraft has an urgent message to transmit concerning the safety of a ship, aircraft, vehicle or other property or of a person on board or within sight of the aircraft from which the signal is given:

(a) by radiotelephony:

the repeated spoken word 'PAN PAN';

(b) by visual signalling:

the signal XXX (-..- -..- -..-);

(c) by sound signalling other than radiotelephony:

the signal XXX (-..- -..- -..-).

THE SECOND SCHEDULE — Regulation 3

Revocations

Regulations Revoked	References
The Rules of the Air Regulations 1996	S.I. 1996/1393
The Rules of the Air (Amendment) Regulations 1999	S.I. 1999/1323
The Rules of the Air (Amendment) Regulations 2000	S.I. 2000/1994
The Rules of the Air (Amendment) Regulations 2001	S.I. 2001/917
The Rules of the Air (Amendment) Regulations 2003	S.I. 2003/64
The Rules of the Air (Amendment) Regulations 2005	S.I. 2005/1110

INTENTIONALLY LEFT BLANK

SECTION 3 THE AIR NAVIGATION (GENERAL) REGULATIONS 2006

NOTE: These Regulations are shown in their original format, unlike some of the other Regulations in this publication which have been reformatted to match the style of the publication.

STATUTORY INSTRUMENTS

2006 No. 601

CIVIL AVIATION

The Air Navigation (General) Regulations 2006

Made - - - -	*6th March 2006*
Coming into force - -	*30th March 2006*

ARRANGEMENT OF REGULATIONS

PART 1
General
1. Citation and commencement
2. Revocation
3. Interpretation

PART 2
Load Sheets and Weighing Requirements
4. Particulars of load sheet
5. Weighing requirements—passengers, crew and hand baggage
6. Weighing requirements—hold baggage and cargo
7. Loading—additional provisions

PART 3
Aircraft Performance
8. Aeroplanes to which article 44(5) applies
9. Helicopters to which article 45(1) applies
10. Weight and performance— general provisions

PART 4
Noise and vibration, maintenance and aerodrome facilities
11. Noise and vibration caused by aircraft on aerodromes
12. Pilots maintenance—prescribed repairs or replacements
13. Aeroplanes flying for the purpose of public transport of passengers—aerodrome facilities for approach to landing and landing

PART 5
Mandatory Reporting
14. Reportable occurrences – time and manner of reporting and information to be reported
15. Mandatory reporting of birdstrikes – time and manner of reporting and information to be reported

PART 6
Navigation performance and equipment
16. Minimum navigation performance and height keeping specifications

17. North Atlantic Minimum Navigation Performance Specification Airspace
18. Airborne Collision Avoidance System
19. Mode S Transponder

SCHEDULE 1 — AEROPLANE PERFORMANCE
SCHEDULE 2 — HELICOPTER PERFORMANCE

The Secretary of State for Transport, in exercise of his powers under articles 16(7)(a), 20(2), 20(4), 42(1)(c)(ii), 43(5), 44(5), 44(6), 45(1), 56(1), 57(1), 58(b), 131(1), 142(6), 143(2) and 155(1) of, and paragraphs 4 and 5(1) of Schedule 5 to, the Air Navigation Order 2005(**a**), makes the following Regulations.

PART 1

General

Citation and commencement

1. These Regulations may be cited as the Air Navigation (General) Regulations 2006, and shall come into force on 30th March 2006.

Revocation

2. The Air Navigation (General) Regulations 2005(**b**) are revoked.

Interpretation

3. In these Regulations—

(a) "the Order" means the Air Navigation Order 2005;

(b) references to an "article" mean an article of the Order; and

(c) other expressions used in these Regulations shall have the same respective meanings as in the Order.

PART 2

Load Sheets and Weighing Requirements

Particulars of load sheet

4. Every load sheet required by article 43(5) shall contain the following particulars—

(a) the nationality mark of the aircraft to which the load sheet relates, and the registration mark assigned to that aircraft by the CAA;

(b) particulars of the flight to which the load sheet relates;

(c) the total weight of the aircraft as loaded for that flight;

(**a**) S.I. 2005/1970
(**b**) S.I. 2005/1980

(d) the weights of the several items from which the total weight of the aircraft, as so loaded, has been calculated including in particular the weight of the aircraft prepared for service and the respective total weights of the crew (unless included in the weight of the aircraft prepared for service), passengers, baggage and cargo intended to be carried on the flight;

(e) the manner in which the load is distributed;

(f) the position of the centre of gravity of the aircraft resulting from the particulars mentioned in sub-paragraphs (c), (d) and (e) which may be given approximately if and to the extent that the relevant certificate of airworthiness so permits; and

(g) a certificate at the foot or end of the load sheet, signed by the person referred to in article 43(1) as responsible for the supervision of the loading of the aircraft, that the aircraft has been loaded in accordance with the written instructions furnished to him by the operator of the aircraft pursuant to article 43(1).

Weighing requirements—passengers, crew and hand baggage

5.—(1) Subject to paragraph (2), for the purpose of calculating the total weight of the aircraft the respective total weights of the passengers and crew together with their hand baggage entered in the load sheet shall be computed from the actual weight of each person and their hand baggage and for that purpose each person and their hand baggage shall be separately weighed.

(2) The total weights of the passengers and crew together with their hand baggage may, in accordance with paragraphs (3) to (8) and subject to regulation 7, be calculated at not less than the appropriate weights shown in Tables 1 or 2 and the load sheet shall bear a notation to that effect.

(3) Subject to paragraph (4) where the total number of passenger seats available on an aircraft is 20 or more, the weights for males and females in columns 1 and 2 of Table 1 shall be applicable.

(4) Where the total number of passenger seats available is 30 or more, the "all adult" weights in column 3 of Table 1 may be used for passengers over the age of 12 years.

(5) For the purpose of Table 1, 'holiday charter' means a flight by an aircraft for the carriage of passengers each of whom is carried pursuant to an agreement which provides for carriage by air to a place outside the United Kingdom and back from that place, or from another place to the United Kingdom (whether or not on the same aircraft) and for accommodation at a place outside the United Kingdom.

Table 1

Aircraft with 20 or more passengers

	Passenger Seats Available		
	20 or more		*30 or more*
	Column 1	*Column 2*	*Column 3*
	Male	*Female*	*All Adult*
Passengers on all flights except holiday charters	88kg	70kg	84kg
Passengers on holiday charters	83kg	69kg	76kg
Children (between 2–12 years) or infants under 2 years of age if occupying a separate seat	35kg	35kg	
Infants under 2 years of age if sharing a seat with an adult	0kg	0kg	
Flight crew	85kg	85kg	
Cabin crew	75kg	75kg	

(6) Where the total number of passenger seats available on an aircraft is 19 or less the weights in Table 2 shall be applicable.

Table 2

Aircraft with fewer than 20 passenger seats

	Passenger Seats Available		
	1 – 5	*6 – 9*	*10 – 19*
Male passengers	104kg	96kg	92kg
Female passengers	86kg	78kg	74kg
Children (between 2-12 years) or infants under 2 years of age if occupying a separate seat	35kg	35kg	35kg
Infants under 2 years of age if sharing a seat with an adult	0kg	0kg	0kg
Flight crew	85kg	85kg	85kg
Cabin crew	75kg	75kg	75kg

(7) On flights where no hand baggage is carried or where such hand baggage is accounted for separately, 6 kg may be deducted from the weight of passengers over 12 years of age when using Table 2.

(8) Where an immersion suit is worn or carried by a passenger or crew member, 3kg shall be added to the appropriate weight shown in Table 1 or 2 in each such case.

Weighing requirements—hold baggage and cargo

6.—(1) Subject to paragraph (2), for the purpose of calculating the total weight of the aircraft the respective total weights of the hold baggage and cargo entered in the load sheet shall be computed from the actual weight of each piece of baggage, cargo or cargo container and for that purpose each piece or container shall be separately weighed.

(2) In the case of an aircraft where the total number of passenger seats available is 20 or more, the total weights of the hold baggage may, subject to regulation 7, be calculated at not less than the weights shown in Table 3 and the load sheet shall bear a notation to that effect.

Table 3

Hold Baggage

Journey made by aircraft	*Hold baggage per aircraft*
Domestic journey	11kg
European journey	13kg
Intercontinental journey	15kg

(3) For the purposes of Table 3—

a ‘domestic journey’ means a journey made by an aircraft which is confined within an area enclosed by rhumb lines joining successively the points shown in Table 4 but excluding any journey to or from Shannon;

Table 4

Domestic journey

N6100.00	W01100.00	N6100.00	E00200.00
N5105.00	E00200.00	N4930.00	W00400.00
N4930.00	W01100.00	N6100.00	W01100.00

a ‘European journey’ is a journey made by an aircraft, not being a domestic journey, which is confined within an area enclosed by the rhumb lines joining successively the points shown in Table 5;

Table 5

European journey

N7200.00	E04500.00	N4000.00	E04500.00
N3500.00	E03700.00	N3000.00	E03700.00
N3000.00	W00600.00	N2700.00	W00900.00
N2700.00	W03000.00	N6700.00	W03000.00
N7200.00	W01000.00	N7200.00	E04500.00

an 'intercontinental journey' is a journey made by an aircraft which is neither a domestic journey nor a European journey.

Loading—additional provisions

7.—(1) If it appears to the person supervising the loading of the aircraft that any of the circumstances described in paragraph (2) arise he shall, if he considers it necessary in the interests of the safety of the aircraft, or if the CAA has so directed in the particular case, require any such person and his hand baggage, passenger or hold baggage, as the case may be, to be weighed for the purpose of the entry to be made in the load sheet.

(2) The circumstances referred to in paragraph (1) are—

(a) any person and his hand baggage to be carried exceeds the weights set out in Tables 1 or 2;

(b) where regulation 5(7) applies, any passenger to be carried exceeds the weights set out in Table 2 as adjusted in accordance with that paragraph; or

(c) any hold baggage to be carried exceeds the weights set out in Table 3.

(3) If any person and his hand baggage, passenger or any hold baggage has been weighed pursuant to paragraph (1), the weights entered in the load sheet shall take account of—

(a) the actual weight of that person and his hand baggage, that passenger or that hold baggage, as the case may be; or

(b) the weight determined in accordance with regulation 5(2) or regulation 6(2),

whichever weight shall be the greater.

PART 3

Aircraft Performance

Aeroplanes to which article 44(5) applies

8.—(1) Aeroplanes to which this regulation applies shall comply with Schedule 1.

(2) This regulation applies to aeroplanes for which the CAA has granted a permission under article 44(5) except any aeroplane flying solely for the purpose of training persons to perform duties in aeroplanes.

Helicopters to which article 45(1) applies

9.—(1) Helicopters to which this regulation applies shall comply with Schedule 2.

(2) This regulation applies to helicopters to which article 45(1) applies except any helicopter flying solely for the purpose of training persons to perform duties in helicopters.

Weight and performance—general provisions

10.—(1) The assessment of the ability of an aeroplane to comply with the requirements of Schedule 1 and of a helicopter to comply with the requirements of Schedule 2 shall be based on the specified information as to its performance.

(2) In assessing the ability of an aeroplane to comply with sub-paragraphs (9), (12), (15) and (17) of paragraph 1 of Schedule 1, with sub-paragraphs (8) and (12) of paragraph 6 of Schedule 1 and with sub-paragraph (15) of paragraph 7 of Schedule 1, account may be taken of any reduction of the weight of the aeroplane which may be achieved after the failure of a power unit by such jettisoning of fuel as is feasible and prudent in the circumstances of the flight and in accordance with the flight manual relating to the aircraft.

(3) In this Part and in Schedules 1 and 2—

'specified' in relation to an aircraft means, unless otherwise stated, specified in, or ascertainable by reference to:

(a) the certificate of airworthiness in force in respect of that aircraft; or

(b) the flight manual or performance schedule for that aircraft;

'the accelerate–stop distance' means the distance from the point on the surface of the aerodrome at which the aeroplane can commence its take-off run to the nearest point in the direction of take-off at which the aeroplane cannot roll over the surface of the aerodrome and be brought to rest in an emergency without the risk of accident;

'the landing distance available' means the distance from the point on the surface of the aerodrome at which the aeroplane can commence its landing, having regard to the obstructions in its approach path, to the nearest point in the direction of landing at which the surface of the aerodrome is incapable of bearing the weight of the aeroplane under normal operating conditions or at which there is an obstacle capable of affecting the safety of the aeroplane;

'the take-off distance available' means either the distance from the point on the surface of the aerodrome at which the aeroplane can commence its take-off run to the nearest obstacle in the direction of take-off projecting above the surface of the aerodrome and capable of affecting the safety of the aeroplane, or one and one half times the take-off run available, whichever is the less;

'the take-off run available' means the distance from the point on the surface of the aerodrome at which the aeroplane can commence its take-off run to the nearest point in the direction of take-off at which the surface of the aerodrome is incapable of bearing the weight of the aeroplane under normal operating conditions.

(4) For the purposes of Schedules 1 and 2—

(a) the weight of the aircraft at the commencement of the take-off run or of the take-off shall be taken to be its gross weight including everything and everyone carried in or on it at the commencement of the take-off run or of the take-off;

(b) the landing weight of the aircraft shall be taken to be the weight of the aircraft at the estimated time of landing allowing for the weight of the fuel and oil expected to be used on the flight to the aerodrome of intended destination or any alternate aerodrome, as the case may be;

(c) where any distance referred to in paragraph (3) has been declared in respect of any aerodrome by the authority responsible for regulating air navigation over the territory of the Contracting State in which the aerodrome is situated, and in the case of an aerodrome in the United Kingdom, notified, that distance shall be deemed to be the relevant distance.

PART 4

Noise and vibration, maintenance and aerodrome facilities

Noise and vibration caused by aircraft on aerodromes

11. For the purposes of article 131(1), the conditions under which noise and vibration may be caused by aircraft (including military aircraft) on Government aerodromes, licensed aerodromes or on aerodromes at which the manufacture, repair or maintenance of aircraft is carried out by persons carrying on business as manufacturers or repairers of aircraft, shall be as follows—

(a) the aircraft is taking off or landing; or

(b) the aircraft is moving on the ground or water; or

(c) the engines are being operated in the aircraft—

(d) for the purpose of ensuring their satisfactory performance;

(e) for the purpose of bringing them to a proper temperature in preparation for, or at the end of, a flight; or

(f) for the purpose of ensuring that the instruments, accessories or other components of the aircraft are in a satisfactory condition.

Pilots maintenance—prescribed repairs or replacements

12. For the purposes of article 16(7)(a), the following repairs or replacements are prescribed—

(a) replacement of landing gear tyres, landing skids or skid shoes;

(b) replacement of elastic shock absorber cord units on landing gear where special tools are not required;

(c) replacement of defective safety wiring or split pins excluding those in engine, transmission, flight control and rotor systems;

(d) patch-repairs to fabric not requiring rib stitching or the removal of structural parts or control surfaces, if the repairs do not cover up structural damage and do not include repairs to rotor blades;

(e) repairs to upholstery and decorative furnishing of the cabin or cockpit interior when repair does not require dismantling of any structure or operating system or interfere with an operating system or affect the structure of the aircraft;

(f) repairs, not requiring welding, to fairings, non-structural cover plates and cowlings;

(g) replacement of side windows where that work does not interfere with the structure or with any operating system;

(h) replacement of safety belts or safety harnesses;

(i) replacement of seats or seat parts not involving dismantling of any structure or of any operating system;

(j) replacement of bulbs, reflectors, glasses, lenses or lights;

(k) replacement of any cowling not requiring removal of the propeller, rotors or disconnection of engine or flight controls;

(l) replacement of unserviceable sparking plugs;

(m) replacement of batteries;

(n) replacement of wings and tail surfaces and controls, the attachments of which are designed to provide for assembly immediately before each flight and dismantling after each flight;

(o) replacement of main rotor blades that are designed for removal where special tools are not required;

(p) replacement of generator and fan belts designed for removal where special tools are not required;

(q) replacement of VHF communication equipment, being equipment which is not combined with navigation equipment.

Aeroplanes flying for the purpose of public transport of passengers—aerodrome facilities for approach to landing and landing

13.—(1) This regulation shall apply to every aeroplane registered in the United Kingdom engaged on a flight for the purpose of public transport of passengers on a scheduled journey and to every aeroplane so registered whose maximum total weight authorised exceeds 5,700 kg engaged on a flight for such a purpose otherwise than on a scheduled journey.

(2) For the purposes of article 42(1)(c)(ii), the following manning and equipment are prescribed in relation to aerodromes intended to be used for landing or as an alternate aerodrome by aircraft to which this regulation applies—

(a) air traffic control service or aerodrome flight information service, including the reporting to aircraft of the current meteorological conditions at the aerodrome;

(b) very high frequency radiotelephony;

(c) at least one of the following radio navigation aids, either at the aerodrome or elsewhere, and in either case for the purpose of assisting the pilot in locating the aerodrome and in making an approach to landing there—

(i) radio direction finding equipment utilising emissions in the very high frequency bands;

(ii) a non-directional radio beacon transmitting signals in the low or medium frequency bands;

(iii) very high frequency omni-directional radio range;

(iv) radar equipment.

(3) Subject to paragraph (4), an aircraft to which this regulation applies shall not land or make an approach to landing at any aerodrome unless—

(a) one of the services and the equipment prescribed by paragraph (2) are provided and are in operation at that aerodrome;

(b) such services and equipment can be made use of by that aircraft; and

(c) in the case of the navigation aids specified in paragraph (2)(c), instructions and procedures for the use of the aid are included in the operations manual relating to the aircraft.

(4) A person shall be deemed not to have contravened paragraph (3) if he proves that—

(a) for the time being use could not be made of the radio navigation aids provided under paragraph (2)(c) whether by reason of those aids not being in operation or of the unserviceability of equipment in the aircraft itself; and

(b) the approach to landing was made in accordance with instructions and procedures appropriate to that circumstance and included in the operations manual relating to the aircraft.

PART 5

Mandatory Reporting

Reportable occurrences – time and manner of reporting and information to be reported

14.—(1) For the purposes of article 142(6) but subject to paragraph (2) it is prescribed that a report containing the information referred to in paragraph (3) shall be made to the CAA by post,

telex, electronic, facsimile transmission or other similar means which produces a document containing a text of the communication (written in English) within 96 hours of the reportable occurrence coming to the knowledge of the person making the report.

(2) If at the expiry of the time allowed by paragraph (1) for making the report any of the information referred to in that paragraph is not in the possession of the person making the report, he shall despatch the report to the CAA by post, telex, electronic, facsimile transmission or other similar means which produces a document containing a text of the communication (written in English) within 96 hours of the information coming into his possession.

(3) For the purposes of article 142(6), a report shall, as far as possible, contain the following information—

(a) the type, series and registration marks of the aircraft concerned;

(b) the name of the operator of the aircraft;

(c) the date of the reportable occurrence;

(d) if the person making the report has instituted an investigation into the reportable occurrence, whether or not this has been completed;

(e) a description of the reportable occurrence, including its effects and any other relevant information;

(f) in the case of a reportable occurrence which occurs during flight—

(i) the Co-ordinated Universal Time of the occurrence;

(ii) the last point of departure and the next point of intended landing of the aircraft at that time; and

(iii) the geographical position of the aircraft at that time;

(g) in the case of a defect in or malfunctioning of an aircraft or any part or equipment of an aircraft, the name of the manufacturer of the aircraft, part or equipment, as the case may be, and, where appropriate, the part number and modification standard of the part or equipment and its location on the aircraft;

(h) the signature and name in block capitals of the person making the report, the name of his employer and the capacity in which he acts for that employer; and

(i) in the case of a report made by the commander of an aircraft or a person referred to in sub-paragraphs (f), (g) or (h) of article 142(5), the address or telephone number at which communications should be made to him, if different from that of his place of employment.

Mandatory reporting of birdstrikes – time and manner of reporting and information to be reported

15.—(1) Subject to paragraph (2), for the purposes of article 143(2) a report containing the information referred to in paragraph (3) shall be made to the CAA by post, telex, electronic, facsimile transmission or other similar means which produce a document containing a text of the communication (written in English) within 96 hours of the birdstrike occurrence coming to the knowledge of the person making the report.

(2) If at the expiry of the time allowed by paragraph (1) for making the report any of the information referred to in that paragraph is not in the possession of the person making the report, he shall despatch the report to the CAA by post, telex, electronic, facsimile transmission or other similar means which produce a document containing a text of the communication (written in English) within 96 hours of the information coming into his possession.

(3) For the purposes of article 143(2) a report shall, as far as possible, contain the following information—

(a) the type, series and registration marks of the aircraft concerned;

(b) the name of the operator of the aircraft;

(c) the date and the Co-ordinated Universal Time of the birdstrike occurrence;

(d) the last point of departure and the next point of intended landing of the aircraft at that time;

(e) a description of the birdstrike occurrence, including the part(s) of the aircraft affected, the effect on flight and any other relevant information;

(f) the bird species/description;

(g) the weather at the time of the occurrence;

(h) the runway in use (where relevant);

(i) the height and speed of the aircraft;

(j) the phase of flight;

(k) the position (if en route) of the aircraft at the time of the birdstrike;

(l) any other reporting action taken;

(m) the signature and name in block capitals of the person making the report;

(n) the name of his employer and the capacity in which he acts for that employer; and

(o) the address or telephone number at which communications should be made to him.

PART 6

Navigation performance and equipment

Minimum navigation performance and height keeping specifications

16.—(1) For the purposes of article 56(1) the following navigation performance capability is prescribed, that is to say, a capability to ensure that—

(a) the standard deviation of lateral errors in the track of the aircraft is not more than 6.3 nautical miles;

(b) the proportion of the flight time of the aircraft during which the actual track of the aircraft is 30 nautical miles or more off the track along which it has been given an air traffic control clearance to fly is less than 5.3 × 10-4, and;

(c) the proportion of the flight time of the aircraft during which the actual track of the aircraft is between 50 and 70 nautical miles off the track along which it has been given an air traffic control clearance to fly is less than 13 × 10-5.

(2) For the purposes of article 57(1), the following height keeping performance capability is prescribed, that is to say, a capability to ensure that—

(a) altimetry system error shall be in compliance with paragraph 2.1.1(2) of Document 7030/4-NAT Part 1 Rules of the Air, Air Traffic Services and Search and Rescue (ICAO Regional Procedures, Fourth Edition–1987);

(b) in respect of aircraft first registered in a Contracting State on or after 1st January 1997 altitude can be automatically controlled within a tolerance band of + / - 65 feet; and

(c) in respect of aircraft first registered in a Contracting State before 1st January 1997 altitude can be automatically controlled within a tolerance band of + / - 130 feet.

North Atlantic Minimum Navigation Performance Specification Airspace

17. For the purposes of articles 56(1) and 155(1), the following airspace is prescribed as North Atlantic Minimum Navigation Performance Specification airspace, that is to say, the airspace from flight level 285 to flight level 420 within the area defined by rhumb lines joining successively the following points—

Table 6

North Atlantic Minimum Navigation Performance Specification airspace

N3410.00 W01748.00	North Pole	N4152.00 W06700.00
N3630.00 W01500.00	N8200.00 W06000.00	N3900.00 W06700.00
N4200.00 W01500.00	N7800.00 W07500.00	N3835.00 W06853.00
N4300.00 W01300.00	N7600.00 W07600.00	N3830.00 W06915.00
N4500.00 W01300.00	N6500.00 W05745.00	N3830.00 W06000.00
N4500.00 W00800.00	N6500.00 W06000.00	N2700.00 W06000.00
N5100.00 W00800.00	N6400.00 W06300.00	N2700.00 W04000.00
N5100.00 W01500.00	N6100.00 W06300.00	N2218.00 W04000.00
N5400.00 W01500.00	N5700.00 W05900.00	N1700.00 W03730.00
N5434.00 W01000.00	N5300.00 W05400.00	N2400.00 W02500.00
N6100.00 W01000.00	N4900.00 W05100.00	N3000.00 W02500.00
N6100.00 00000.00	N4500.00 W05100.00	N3000.00 W02000.00
N8200.00 00000.00	N4500.00 W05300.00	N3139.00 W01725.00
N8200.00 E03000.00	N4336.00 W06000.00	

and from there by that part of the arc of a circle radius 100 nautical miles centred on N3304.00 W01621.00 to N3410.00 W01748.00.

Airborne Collision Avoidance System

18. For the purposes of paragraph 5(1) of Schedule 5 to the Order the prescribed requirements for an airborne collision avoidance system shall be the requirements for ACAS II equipment set out in Volume IV (Third Edition–July 2002), Chapter 4, of Annex 10 to the Chicago Convention.

Mode S Transponder

19.—(1) For the purposes of paragraph 4 of Schedule 5 to the Order, the capability and functionality prescribed for Mode S Elementary Surveillance shall be that specified for a level 2 transponder in Volumes III (First Edition–July 1995) and IV (Third Edition–July 2002) of Annex 10 (Third Edition) to the Chicago Convention together with the additional functionality specified in paragraph (3).

(2) For the purposes of paragraph 4 of Schedule 5 to the Order, the capability and functionality prescribed for Mode S Enhanced Surveillance shall be that specified for a level 2 transponder in Volumes III (First Edition–July 1995) and IV (Third Edition–July 2002) of Annex 10 (Third Edition) to the Chicago Convention together with the additional functionality specified in paragraph (3) and the additional downlinked parameters specified in paragraph (4).

(3) The additional functionality referred to in paragraphs (1) and (2) is—

(a) capability to support the Interrogator Identifier (II) Code and Surveillance Identifier (SI) Code functionality;

(b) Extended Squitter Functionality which, for this purpose, means functionality that supports Mode S Elementary Surveillance and Mode S Enhanced Surveillance to provide Automatic Dependant Surveillance–Broadcast, using unsolicited transponder broadcasts;

(c) ACAS Active Resolution Advisory.

(4) The additional downlinked parameters referred to in paragraph (2) are—

(a) reporting of the Magnetic Heading Downlinked Aircraft Parameter;

(b) reporting of the Indicated Airspeed Downlinked Aircraft Parameter;

(c) reporting of the Mach Number Downlinked Aircraft Parameter;

(d) reporting of the Vertical Rate Downlinked Aircraft Parameter;

(e) reporting of the Roll Angle Downlinked Aircraft Parameter;

(f) reporting of the Track Angle Rate Downlinked Aircraft Parameter;

(g) reporting of the True Track Angle Downlinked Aircraft Parameter;

(h) reporting of the Ground Speed Downlinked Aircraft Parameter;

(i) reporting of the Selected Vertical Intent Downlinked Aircraft Parameter (including Barometric Pressure Setting).

Signed by authority of the Secretary of State for Transport

Karen Buck

Parliamentary Under Secretary of State Department for Transport
6th March 2006

SCHEDULE 1

Regulation 8

AEROPLANE PERFORMANCE

CONTENTS

1. Weight and performance of public transport aeroplanes specified as aeroplanes of performance group A or performance group B
2. Weight and performance of public transport aeroplanes specified as aeroplanes of performance group C
3. Weight and performance of public transport aeroplanes specified as aeroplanes of performance group D
4. Weight and performance of public transport aeroplanes specified as aeroplanes of performance group E
5. Weight and performance of public transport aeroplanes specified as aeroplanes of performance group F
6. Weight and performance of public transport aeroplanes specified as aeroplanes of performance group X
7. Weight and performance of public transport aeroplanes specified as aeroplanes of performance group Z – aeroplanes of which the specified maximum total weight authorised exceeds 5,700 kg or of which the specified maximum total weight authorised does not exceed 5,700 kg and the wing loading of the aeroplane exceeds 20lb per square foot or the stalling speed of the aeroplane in the landing configuration exceeds 60 knots
8. Weight and performance of public transport aeroplanes specified as aeroplanes of performance group Z – of which the specified maximum total weight authorised does not exceed 5,700 kg and the wing loading of the aeroplane does not exceed 20lb per square foot or the stalling speed of the aeroplane in the landing configuration does not exceed 60 knots (or both)

Weight and performance of public transport aeroplanes specified as aeroplanes of performance group A or performance group B

1.—(1) For the purposes of article 44(6) an aeroplane registered in the United Kingdom, in respect of which there is in force under article 44(5) a permission specifying the aeroplane as being of performance group A or performance group B, shall not fly for the purpose of public transport unless the weight of the aeroplane at the commencement of the take-off run is such that the requirements of sub-paragraphs (2), (3), (5), (9), (12) , (15), (17), (18) and (19) are met.

(2) That weight shall not exceed the maximum take-off weight specified for the altitude and the air temperature at the aerodrome at which the take-off is to be made.

(3) Subject to sub-paragraph (4), the take-off run, take-off distance and the accelerate–stop distance respectively required for take-off, specified as being appropriate to—

(a) the weight of the aeroplane at the commencement of the take-off run;

(b) the altitude at the aerodrome;

(c) the air temperature at the aerodrome;

(d) the condition of the surface of the runway from which the take-off will be made;

(e) the slope of the surface of the aerodrome in the direction of take-off over the take-off run available, the take-off distance available and the accelerate–stop distance available, respectively; and

(f) not more than 50 per cent. of the reported wind component opposite to the direction of take-off or not less than 150 per cent. of the reported wind component in the direction of take-off,

shall not exceed the take-off run, the take-off distance and the accelerate–stop distance available, respectively, at the aerodrome at which the take-off is to be made.

(4) In ascertaining the accelerate-stop distance available required pursuant to sub-paragraph (3), the point at which the pilot is assumed to decide to discontinue the take-off shall not be nearer to the start of the take-off run than the point at which, in ascertaining the take-off run required and the take-off distance required, he is assumed to decide to continue the take-off, in the event of power unit failure.

(5) Subject to sub-paragraphs (6), (7) and (8), the net take-off flight path of the aeroplane with one power unit inoperative, specified as being appropriate to—

(a) the weight of the aeroplane at the commencement of the take-off run;

(b) the altitude at the aerodrome;

(c) the air temperature at the aerodrome;

(d) not more than 50 per cent. of the reported wind component opposite to the direction of take-off or not less than 150 per cent. of the reported wind component in the direction of take-off,

which is plotted from a point 35 feet above the end of the take-off distance required at the aerodrome at which the take-off is to be made to a height of 1,500 feet above the aerodrome, shall show that the aeroplane will clear any obstacle in its path by a vertical interval of at least 35 feet.

(6) If it is intended that the aeroplane shall change its direction of flight by more than 15° before reaching 1,500 feet above the aerodrome the net take-off flight path of the aeroplane referred to in sub-paragraph (5) shall—

(a) be plotted from a point 50 feet above the end of the take-off distance required at the aerodrome at which the take-off is to be made to a height of 1,500 feet above the aerodrome; and

(b) show that the aeroplane will clear any obstacle in its path by a vertical interval of at least 50 feet during the change of direction.

(7) For the purpose of sub-paragraphs (5) and (6) an obstacle shall be deemed to be in the path of the aeroplane if the distance from the obstacle to the nearest point on the ground below the intended line of flight of the aeroplane does not exceed—

(a) a distance of 60 metres plus half the wing span of the aeroplane plus one eighth of the distance from such point to the end of the take-off distance available measured along the intended line of flight of the aeroplane; or

(b) 900 metres,

whichever is least.

(8) In assessing the ability of the aeroplane to satisfy sub-paragraphs (5) and (6), it shall not be assumed the aeroplane will make a change of direction of a radius less than the specified radius of steady turn.

(9) Subject to sub-paragraphs (10) and (11), the aeroplane shall —

(a) in the meteorological conditions expected for the flight;

(b) in the event of any one power unit becoming inoperative at any point on its route or on any planned diversion from it; and

(c) with the other power unit or units operating within the specified maximum continuous power conditions,

be capable of continuing the flight, clearing obstacles within 10 nautical miles either side of the intended track by a vertical interval of at least 2,000 feet, to an aerodrome at which it can comply with sub-paragraph (19); and on arrival over such aerodrome the gradient of the specified net

flight path with one power unit inoperative shall not be less than zero at 1,500 feet above the aerodrome.

(10) In assessing the ability of the aeroplane to satisfy sub-paragraph (9) it shall not be assumed to be capable of flying at an altitude exceeding the specified maximum permissible altitude for power unit restarting.

(11) If the operator of the aeroplane is satisfied, taking into account the navigation aids which can be made use of by the aeroplane on the route, that the commander of the aeroplane will be able to maintain his intended track on that route within a margin of 5 nautical miles, sub-paragraph (9) shall have effect as if 5 nautical miles were substituted for 10 nautical miles.

(12) Subject to sub-paragraphs (13) and (14), if the aeroplane has three or more power units, it shall—

(a) in the meteorological conditions expected for the flight; and

(b) in the event of any two power units becoming inoperative at any point:

(i) along the route ; or

(ii) on any planned diversion from the route which is more than 90 minutes flying time in still air, at the all power units operating economical cruise speed, from the nearest aerodrome at which it can comply with sub-paragraph (19),

be capable of continuing the flight with all other power units operating within the specified maximum continuous power conditions, clearing by a vertical interval of at least 2,000 feet obstacles within 10 nautical miles either side of the intended track to such an aerodrome; and on arrival over such an aerodrome the gradient of the specified net flight path with two power units inoperative shall not be less than zero at 1,500 feet above the aerodrome.

(13) In assessing the ability of the aeroplane to satisfy sub-paragraph (12) it shall not be assumed to be capable of flying at an altitude exceeding the specified maximum permissible altitude for power unit restarting.

(14) If the operator of the aeroplane is satisfied, taking into account the navigation aids which can be made use of by the aeroplane on the route, that the commander of the aeroplane will be able to maintain his intended track on that route within a margin of 5 nautical miles, sub-paragraph (12) shall have effect as if 5 nautical miles were substituted for 10 nautical miles.

(15) Subject to sub-paragraph (16), if the aeroplane—

(a) has two power units and a maximum total weight authorised which exceeds 5,700 kg; and

(b) is not limited by its certificate of airworthiness to the carriage of less than 20 passengers,

it shall, in the meteorological conditions expected for the flight, be not more than 60 minutes flying time, at the normal one engine inoperative cruise speed in still air, from the nearest aerodrome at which it can comply with sub-paragraph (19) at any point along the route or any planned diversion from it.

(16) Sub-paragraph (15) shall not apply to an aeroplane flying under, and in accordance with, the terms of a written permission granted by the CAA to the operator under this sub-paragraph.

(17) If the aeroplane has—

(a) two power units and a maximum total weight authorised of 5,700kg or less; or

(b) two power units and a maximum total weight authorised of more than 5,700kg but is limited by its certificate of airworthiness to the carriage of less than 20 passengers,

it shall, in the meteorological conditions expected for the flight, be not more than 90 minutes flying time in still air, at the all power units operating economical cruise speed, from the nearest aerodrome at which it can comply with sub-paragraph (19).

(18) The landing weight of the aeroplane shall not exceed the maximum landing weight specified for the altitude and the expected air temperature for the estimated time of landing at the aerodrome of intended destination and at any alternate aerodrome.

(19) Subject to sub-paragraphs (20) and (21), the landing distances required for an aeroplane powered by turbine-jet, turbine propeller or piston engines, respectively specified as being appropriate to—

(a) the aerodrome of intended destination; and

(b) any alternate aerodrome,

shall not exceed the landing distance available on the most suitable runway for a landing in still air conditions and the landing distance available on the runway that may be required for landing because of the forecast wind conditions at the aerodrome of intended destination or any alternate aerodrome.

(20) If an alternate aerodrome is designated in the flight plan, the specified landing distance required may be that appropriate to that alternate aerodrome when assessing the ability of the aeroplane to satisfy sub-paragraph (19) at the aerodrome of intended destination.

(21) For the purposes of sub-paragraphs (19) and (20) the specified landing distance required shall be that specified as being appropriate to—

(a) the landing weight;

(b) the altitude of the aerodrome;

(c) the temperature in the specified international standard atmosphere appropriate to the altitude at the aerodrome;

(d) a level surface in the case of runways usable in both direction; or the average slope of the runway in the case of runways usable in only one direction; and

(e) still air conditions in the case of the most suitable runway for a landing in still air conditions and not more than 50 per cent. of the forecast wind component opposite to the direction of landing or not less than 150 per cent. of the forecast wind component in the direction of landing in the case of the runway that may be required for landing because of the forecast wind conditions.

Weight and performance of public transport aeroplanes specified as aeroplanes of performance group C

2.—(1) For the purposes of article 44(6), an aeroplane registered in the United Kingdom in respect of which there is in force under article 44(5) a permission specifying the aeroplane as being of performance group C shall not fly for the purpose of public transport unless the weight of the aeroplane at the commencement of the take-off run is such that the requirements of sub-paragraphs (2), (3), (4), (8), (12), (14), (15) or, as an alternative to sub-paragraph (15), (17) are met.

(2) The weight of the aeroplane shall not exceed the maximum take-off weight specified for the altitude and the air temperature at the aerodrome at which the take-off is to be made.

(3) The take-off run required and the take-off distance required, specified as being appropriate to—

(a) the weight of the aeroplane at the commencement of the take-off run;

(b) the altitude at the aerodrome;

(c) the air temperature at the aerodrome;

(d) the average slope of the surface of the aerodrome in the direction of take-off over the accelerate-stop distance available; and

(e) not more than 50 per cent. of the reported wind component opposite to the direction of take-off or not less than 150 per cent. of the reported wind component in the direction of take-off,

shall not exceed the take-off run available and the accelerate-stop distance available, respectively, at the aerodrome at which the take-off is to be made.

(4) Subject to sub-paragraphs (5), (6) and (7), the net take-off flight path of the aeroplane, with all power units operating, specified as being appropriate to—

(a) the weight of the aeroplane at the commencement of the take-off run;

(b) the altitude of the aerodrome;

(c) the air temperature at the aerodrome;

(d) not more than 50 per cent. of the reported wind component opposite to the direction of the take-off or not less than 150 per cent. of the reported wind component in the direction of take-off,

which is plotted from a point 50 feet above the end of the take-off distance required at the aerodrome at which the take-off is to be made to a height of 1,500 feet above the aerodrome, shall show that the aeroplane will clear any obstacle in its path by a vertical interval of not less than 35 feet.

(5) If it is intended that the aeroplane shall change its direction of flight by more than 15° before reaching 1,500 feet above the aerodrome the vertical interval referred to in sub-paragraph (4) shall be not less than 50 feet during the change of direction.

(6) For the purpose of sub-paragraph (4) an obstacle shall be deemed to be in the path of the aeroplane if the distance from the obstacle to the nearest point on the ground below the intended line of flight of the aeroplane does not exceed 75 metres.

(7) In assessing the ability of the aeroplane to satisfy sub-paragraph (4), it shall not be assumed the aeroplane will make a change of direction of a radius less than the specified radius of steady turn.

(8) Subject to sub-paragraphs (9), (10) and (11), if the aeroplane is intended to be flown for any period before reaching a height of 1,500 feet above the aerodrome from which the take-off is to be made in conditions which will not ensure that any obstacles can be located by means of visual observation, the net take-off flight path of the aeroplane, with one power unit inoperative, which is—

(a) specified as being appropriate to the factors contained in paragraphs (a) to (d) of sub-paragraph (4); and

(b) plotted from the point of the net take-off flight path, with all power units operating specified as being appropriate to those factors at which, in the meteorological conditions expected for the flight, the loss of visual reference would occur,

shall show that the aeroplane will clear by a vertical interval of not less than 35 feet any obstacle in its path.

(9) If it is intended that the aeroplane shall change its direction of flight by more than 15° before reaching 1,500 feet above the aerodrome the vertical interval referred to in sub-paragraph (8) shall not be less than 50 feet during the change of direction.

(10) For the purpose of sub-paragraph (8) an obstacle shall be deemed to be in the path of the aeroplane if the distance from the obstacle to the nearest point on the ground below the intended line of flight of the aeroplane does not exceed—

(a) 75 metres plus one-eighth of the distance from such point to the end of the accelerate-stop distance available measured along the intended line of flight of the aeroplane; or

(b) 900 metres,

whichever is least.

(11) In assessing the ability of the aeroplane to satisfy sub-paragraph (8) it shall not be assumed the aeroplane will make a change of direction of a radius of less than the specified radius of steady turn.

(12) Subject to sub-paragraph (13), the aeroplane shall —

(a) at any time after it reaches a height of 1,500 feet above the aerodrome from which the take-off is made;

(b) in the event of any one power unit becoming inoperative at any point on its route or on any planned diversion from it;

(c) with the other power unit or power units operating within the specified maximum continuous power conditions; and

(d) in the meteorological conditions expected for the flight,

be capable of continuing the flight at altitudes not less than the relevant minimum altitude for safe flight stated in, or calculated from the information contained in, the operations manual relating to the aeroplane to a point 1,500 feet above an aerodrome at which a safe landing can be made; and after arrival at that point shall be capable of maintaining that height.

(13) In assessing the ability of the aeroplane to satisfy sub-paragraph (12) it shall not be assumed to be capable of flying at any point on its route at an altitude exceeding the performance ceiling, with all power units operating, specified as being appropriate to its estimated weight at that point.

(14) The landing weight of the aeroplane shall not exceed the maximum landing weight specified for the altitude and the expected air temperature for the estimated time of landing at the aerodrome of intended destination and at any alternate aerodrome.

(15) Subject to sub-paragraphs (16) and (17), the distance required by the aeroplane to land from a height of 50 feet above the threshold of the runway, otherwise than in accordance with specified data for short field landing, at—

(a) the aerodrome of intended destination; and

(b) any alternate aerodrome,

shall not exceed 70 per cent. of the landing distance available on the most suitable runway for a landing in still air conditions and 70 per cent. of the landing distance available on the runway that may be required for landing because of the forecast wind conditions.

(16) For the purposes of sub-paragraph (15) the distance required to land from a height of 50 feet above the threshold of the runway shall be taken to be that specified as being appropriate to—

(a) the landing weight;

(b) the altitude at the aerodrome;

(c) the temperature in the specified international standard atmosphere appropriate to the altitude at the aerodrome;

(d) the level surface in the case of runways usable in both directions or the average slope of the runway in the case of runways usable in only one direction;

(e) still air conditions in the case of the most suitable runway for landing in still air conditions; and

(f) not more than 50 per cent. of the forecast wind component opposite to the direction of landing or not less than 150 per cent. of the forecast wind component in the direction of landing in the case of the runway that may be required for landing because of the forecast wind conditions.

(17) As an alternative to sub-paragraph (15) but subject to sub-paragraphs (18), (19) and (20) the distance required by the aeroplane to land in accordance with specified data for short field landing, with all power units operating or with one power unit inoperative at—

(a) the aerodrome of intended destination; and

(b) any alternate aerodrome,

shall not exceed the landing distance available on the most suitable runway for a landing in still air conditions and the landing distance available on the runway that may be required for landing because of the forecast wind conditions.

(18) For the purposes of sub-paragraph (17) the distance required to land from the appropriate height shall be taken to be that specified as being appropriate to the factors set forth in paragraphs (a) to (e) of sub-paragraph (16) and, subject to sub-paragraph (19), the appropriate height shall be—

(a) for a landing with all power units operating—any height between 30 and 50 feet above the threshold of the runway in the United Kingdom, and 50 feet above the threshold of the runway elsewhere; and

(b) for a landing with one power unit inoperative—50 feet above the threshold of the runway in both the United Kingdom and elsewhere.

(19) If the specified distance required to land with one power unit inoperative from a height of 50 feet above the threshold of the runway at the aerodrome of intended destination exceeds the landing distance available, it shall be sufficient compliance with paragraph (b) of sub-paragraph (18) if an alternate aerodrome, which has available the specified landing distance required to land with one power unit inoperative from such a height, is designated in the flight plan.

(20) The distance required by the aeroplane to land shall be determined in accordance with sub-paragraph (15), and not in accordance with sub-paragraph (17), if either—

(a) it is intended to land at night; or

(b) it is intended to land when the cloud ceiling or ground visibility forecast for the estimated time of landing at the aerodrome of intended destination, and at any alternate aerodrome at which it is intended to land in accordance with specified data for short field landing with all power units operating, are less than 500 feet and one nautical mile respectively.

Weight and performance of public transport aeroplanes specified as aeroplanes of performance group D

3.—(1) For the purposes of article 44(6) and subject to sub-paragraph (13), an aeroplane registered in the United Kingdom, in respect of which there is in force under article 44(5) a permission specifying the aeroplane as being of performance group D, shall not fly for the purpose of public transport unless the weight of the aeroplane at the commencement of the take-off run is such that the requirements of sub-paragraphs (2), (3), (4), (8), (10) and (11) are met.

(2) That weight shall not exceed the maximum take-off weight specified for the altitude and air temperature at the aerodrome at which the take-off is to be made.

(3) The take-off run required and the take-off distance required specified as being appropriate to—

(a) the weight of the aeroplane at the commencement of the take-off run;

(b) the altitude of the aerodrome;

(c) the air temperature at the aerodrome;

(d) the average slope of the surface of the aerodrome in the direction of take-off over the accelerate-stop distance available; and

(e) not more than 50 per cent. of the reported wind component opposite to the direction of take-off or not less than 150 per cent. of the reported wind component in the direction of take-off,

shall not exceed the take-off run available and the accelerate-stop distance available, respectively, at the aerodrome at which the take-off is to be made.

(4) Subject to sub-paragraphs (5), (6) and (7), the net take-off flight path with all power units operating, specified as being appropriate to—

(a) the weight of the aeroplane at the commencement of the take-off run;

(b) the altitude at the aerodrome;

(c) the air temperature at the aerodrome; and

(d) not more than 50 per cent. of the reported wind component opposite to the direction of take-off or not less than 150 per cent. of the reported wind component in the direction of take-off,

which is plotted from a point of 50 feet above the end of the take-off distance required at the aerodrome at which the take-off is to be made to the point at which the aeroplane reaches a height

of 1,000 feet above the aerodrome, shall show that the aeroplane will clear any obstacle in its path by a vertical interval of not less than 35 feet.

(5) If it is intended that the aeroplane will change its direction of flight by more than 15° before reaching 1,000 feet above the aerodrome the vertical interval referred to in paragraph (4) shall be not less than 50 feet during the change of direction

(6) For the purpose of sub-paragraph (4) an obstacle shall be deemed to be in the path of the aeroplane if the distance from the obstacle to the nearest point on the ground below the intended line of flight of the aeroplane does not exceed 75 metres.

(7) In assessing the ability of the aeroplane to satisfy sub-paragraph (4) it shall not be assumed to make a change of direction of a radius less than the specified radius of steady turn.

(8) Subject to sub-paragraph (9), the aeroplane shall—

(a) at any time after it reaches a height of 1,000 feet above the aerodrome from which the take-off is to be made;

(b) in the meteorological conditions expected for the flight;

(c) in the event of any one power unit becoming inoperative at any point on its route or on any planned diversion from it; and

(d) with the other power unit or power units, if any, operating within the maximum specified continuous power conditions,

be capable of continuing the flight at altitudes not less than the relevant minimum altitudes for safe flight stated in, or calculated from the information contained in, the operations manual relating to the aeroplane to a point 1,000 feet above a place at which a safe landing can be made.

(9) In assessing the ability of the aeroplane to satisfy sub-paragraph (8) it shall not be assumed to be capable of flying at any point on its route at an altitude exceeding the performance ceiling with all power units operating specified as being appropriate to its estimated weight at that point.

(10) The landing weight of the aeroplane shall not exceed the maximum landing weight specified for the altitude and the expected air temperature for the estimated time of landing at the aerodrome of intended destination and at any alternate aerodrome.

(11) Subject to sub-paragraph (12), the distance required by the aeroplane to land from a height of 50 feet above the threshold of the runway at—

(a) the aerodrome of intended destination; and

(b) any alternate aerodrome,

shall not exceed 70 per cent. of the landing distance available on the most suitable runway for a landing in still air conditions and 70 per cent. of the landing distance available on the runway that may be required for landing because of the forecast wind conditions.

(12) For the purposes of sub-paragraph (11) the distance required to land from a height of 50 feet above the threshold of the runway shall be taken to be that specified as being appropriate to—

(a) the landing weight;

(b) the altitude at the aerodrome;

(c) the temperature in the specified international standard atmosphere appropriate to the altitude at the aerodrome;

(d) a level surface in the case of runways usable in both directions or the average slope of the runway in the case of runways usable in only one direction; and

(e) still air conditions in the case of the most suitable runway for a landing in still air conditions and not more than 50 per cent. of the forecast wind component opposite to the direction of landing or not less than 150 per cent. of the forecast wind component in the direction of landing in the case of the runway that may be required for the landing because of the forecast wind conditions.

(13) An aeroplane specified by a permission granted under article 44(5) as an aeroplane of performance group D shall not fly for the purpose of public transport—

(a) at night; or

(b) when the cloud ceiling or visibility prevailing at the aerodrome of departure or forecast for the estimated time of landing at the aerodrome of intended destination or at any alternate aerodrome are less than 1,000 feet and one nautical mile respectively.

Weight and performance of public transport aeroplanes specified as aeroplanes of performance group E

4.—(1) For the purposes of article 44(6) and subject to sub-paragraph (11), an aeroplane registered in the United Kingdom, in respect of which there is in force under article 44(5) a permission specifying the aeroplane as being of performance group E, shall not fly for the purpose of public transport unless the weight of the aeroplane at the commencement of the take-off run is such that the requirements of sub-paragraphs (2), (3), (5), (8) and (9) are met.

(2) The weight for the altitude and the air temperature at the aerodrome at which the take-off is to be made shall not exceed the maximum take-off weight specified as being appropriate to—

(a) the weight at which the aeroplane is capable of a rate of climb of 700 feet per minute if it has retractable landing gear and of 500 feet per minute if it has fixed landing gear, in the en route configuration and with all power units operating within the specified maximum continuous power conditions; and

(b) the weight at which the aeroplane is capable, with one power unit inoperative, of a rate of climb of 150 feet per minute in the en route configuration and if it is necessary for it to be flown solely by reference to instruments for any period before reaching the minimum altitude for safe flight on the first stage of the route to be flown, as stated in, or calculated from, the information contained in the operations manual relating to the aeroplane.

(3) Subject to sub-paragraph (4), with all power units operating within the maximum take-off power conditions specified and when multiplied by a factor of 1.33 the distance required by the aeroplane to attain a height of 50 feet shall not exceed the accelerate-stop distance available at the aerodrome at which the take-off is to be made.

(4) For the purposes of sub-paragraph (3) the distance required by the aeroplane to attain a height of 50 feet shall be that appropriate to—

(a) the weight of the aeroplane at the commencement of the take-off run;

(b) the altitude at the aerodrome;

(c) the air temperature at the aerodrome; and

(d) not more than 50 per cent. of the reported wind component opposite to the direction of take-off or not less than 150 per cent. of the reported wind component in the direction of take-off.

(5) Subject to sub-paragraphs (6) and (7), the aeroplane shall—

(a) after the aeroplane reaches a height of 1,000 feet above the aerodrome from which take-off is to be made;

(b) in the meteorological conditions expected for the flight; and

(c) in the event of any one power unit becoming inoperative at any point on its route or on any planned diversion from such route, and with the other power unit or units, if any, operating within the specified maximum continuous power conditions,

be capable of continuing the flight at altitudes not less than the relevant minimum altitude for safe flight stated in, or calculated from the information contained in, the operations manual relating to the aeroplane to a point 1,000 feet above a place at which a safe landing can be made.

(6) In assessing the ability of the aeroplane to satisfy sub-paragraph (5) it shall not be assumed to be capable of flying at any point on its route, or on any planned diversion from such route, at an altitude exceeding that at which it is capable of a rate of climb, with all power units operating within the maximum continuous power conditions specified, of 150 feet per minute.

(7) For the purposes of sub-paragraph (5) if it is necessary for the aircraft to be flown solely by reference to instruments, it shall be assumed to be capable, with one power unit inoperative, of a rate of climb of 100 feet per minute.

(8) The landing weights of the aeroplane for the altitude and the expected air temperature for the estimated time of landing at the aerodrome of intended destination and at any alternate aerodrome shall not exceed the following maximum landing weights—

(a) those specified at which the aeroplane is capable, in the en route configuration and with all power units operating within the specified maximum continuous power conditions, of a rate of climb of 700 feet per minute if it has retractable landing gear and of 500 feet per minute if it has fixed landing gear; and

(b) those specified at which the aeroplane is capable, in the en route configuration and if it is necessary for it to be flown solely by reference to instruments for any period after leaving the minimum altitude for safe flight on the last stage of the route to be flown, as stated in, or calculated from the information contained in, the operations manual relating to the aeroplane, and with one power unit inoperative, of a rate of climb of 150 feet per minute.

(9) Subject to sub-paragraph (10), the landing distance required shall not exceed 70 per cent. of the landing distance available on the most suitable runway for a landing in still air conditions at the aerodrome of intended destination and at any alternate aerodrome.

(10) For the purposes of sub-paragraph (9) the distance required to land from a height of 50 feet above the threshold of the runway shall be taken to be that specified as being appropriate to—

(a) the landing weight;

(b) the altitude at the aerodrome; and

(c) the temperature in the specified international standard atmosphere appropriate to the altitude at the aerodrome.

(11) An aeroplane specified by a permission granted under article 44(5) as an aeroplane of performance group E shall not fly for the purpose of public transport—

(a) at night; or

(b) when the cloud ceiling or visibility prevailing at the aerodrome of departure or forecast for the estimated time of landing at the aerodrome of intended destination or at any alternate aerodrome are less than 1,000 feet and one nautical mile respectively,

unless the aeroplane is capable, in the en route configuration and with one power unit inoperative, of a rate of climb of 150 feet per minute.

Weight and performance of public transport aeroplanes specified as aeroplanes of performance group F

5.—(1) For the purposes of article 44(6) and subject to sub-paragraph (9), an aeroplane registered in the United Kingdom in respect of which there is in force a permission granted under article 44(5) specifying the aeroplane as being of performance group F, shall not fly for the purpose of public transport unless the weight of the aeroplane at the commencement of the take-off run is such that the requirements of sub-paragraphs (2), (3), (4), (6) and (7) are met.

(2) That weight shall not exceed the maximum take-off weight specified for the altitude and the air temperature at the aerodrome at which the take-off is to be made.

(3) The take-off distance required, specified as being appropriate to—

(a) the weight of the aeroplane at the commencement of the take-off run;

(b) the altitude at the aerodrome;

(c) the air temperature at the aerodrome;

(d) the average slope of the surface of the aerodrome in the direction of take-off over the take-off run available; and

(e) not more than 50 per cent. of the reported wind component opposite to the direction of take-off or not less than 150 per cent. of the reported wind component in the direction of take-off,

shall not exceed the take-off run available at the aerodrome at which the take-off is to be made.

(4) Subject to sub-paragraph (5), the aeroplane shall—

(a) after the aeroplane reaches a height of 1,000 feet above the aerodrome from which take-off is to be made;

(b) in the meteorological conditions expected for the flight; and

(c) in the event of any one power unit becoming inoperative at any point on its route or on any planned diversion from it, and with the other power unit or power units, if any, operating within the specified maximum continuous power conditions,

be capable of continuing the flight at altitudes not less than the relevant minimum altitude for safe flight stated in, or calculated from the information contained in, the operations manual relating to the aeroplane to a point 1,000 feet above, in the case of an aeroplane having one power unit, a place at which a safe landing can be made and, in the case of an aeroplane having two or more power units, an aerodrome at which it can comply with sub-paragraph (7).

(5) In assessing the ability of the aeroplane to satisfy sub-paragraph (4)—

(a) the aeroplane shall not be assumed to be capable of flying, at any point on its route or on any planned diversion from it, at an altitude exceeding that at which it is capable of a gradient of climb of 2 per cent, with all power units operating within specified maximum continuous power conditions; and

(b) the aeroplane shall be required to be capable of a gradient of climb of 1 per cent at the relevant minimum safe altitude, with one power unit inoperative and with the other power unit or power units operating within the specified maximum continuous power conditions, over those parts of the route or any planned diversion where, in the meteorological conditions expected for the flight, it is expected that the aeroplane will be out of sight of the surface due to cloud cover at or below the relevant minimum safe altitude.

(6) The landing weight of the aeroplane shall not exceed the maximum landing weight specified for the altitude and the expected air temperature for the estimated time of landing at the aerodrome of intended destination and at any alternate aerodrome.

(7) Subject to sub-paragraph (8), the landing distance required shall not exceed the landing distance available on the most suitable runway for a landing in still air conditions at the aerodrome of intended destination or at any alternate aerodrome, as the case may be.

(8) For the purposes of sub-paragraph (7) the landing distance required shall be that specified as being appropriate to—

(a) the landing weight;

(b) the altitude at the aerodrome;

(c) the temperature in the specified international standard atmosphere appropriate to the altitude at the aerodrome;

(d) a runway with a level surface; and

(e) still air conditions.

(9) An aeroplane with one power-unit specified by a permission granted under article 44(5) as an aeroplane of performance group F shall not fly for the purpose of public transport—

(a) at night; or

(b) when the cloud ceiling or visibility prevailing at the aerodrome of departure or forecast for the estimated time of landing at the aerodrome of intended destination or at any alternate aerodrome are less than 1,000 feet and one nautical mile respectively.

Weight and performance of public transport aeroplanes specified as aeroplanes of performance group X

6.—(1) For the purposes of article 44(6), an aeroplane in respect of which there is in force under article 44(5) a permission specifying the aeroplane as being of performance group X shall not fly for the purpose of public transport unless the weight of the aeroplane at the commencement of the take-off run is such that the requirements of sub-paragraphs (2), (3), (4), (7), (9), (11), (12), (14) and (15) are met.

(2) That weight shall not exceed the maximum take-off weight specified for the altitude at the aerodrome at which the take-off is to be made, or for the altitude and the air temperature at such aerodrome, as the case may be.

(3) The minimum effective take-off runway length required, specified as being appropriate to—

(a) the weight of the aeroplane at the commencement of the take-off run;

(b) the altitude at the aerodrome;

(c) the air temperature at the time of take-off;

(d) the condition of the surface of the runway from which the take-off will be made;

(e) the overall slope of the take-off run available; and

(f) not more than 50 per cent. of the reported wind component opposite to the direction of take-off or not less than 150 per cent. of the reported wind component in the direction of take-off,

shall not exceed the take-off run available at the aerodrome at which the take-off is to be made.

(4) Subject to sub-paragraphs (5) and (6), the take-off flight path with one power unit inoperative, specified as being appropriate to—

(a) the weight of the aeroplane at the commencement of the take-off run;

(b) the altitude at the aerodrome; and

(c) not more than 50 per cent. of the reported wind component opposite to the direction of take-off or not less than 150 per cent. of the reported wind component in the direction of take-off,

which is plotted from a point 50 feet above the end of the specified minimum effective take-off runway length required at the aerodrome at which the take-off is to be made, shall show that the aeroplane will clear any obstacle in its path by a vertical interval of not less than the greater of 50 feet or 35 feet plus one-hundredth of the distance from the point on the ground below the intended line of flight of the aeroplane nearest to the obstacle to the end of the take-off distance available, measured along the intended line of flight of the aeroplane.

(5) For the purpose of sub-paragraph (4) an obstacle shall be deemed to be in the path of the aeroplane if the distance from the obstacle to the nearest point on the ground below the intended line of flight does not exceed—

(a) a distance of 60 metres plus half the wing span of the aeroplane plus one-eighth of the distance from such point to the end of the take-off distance available measured along the intended line of flight; or

(b) 900 metres,

whichever is least.

(6) In assessing the ability of the aeroplane to satisfy sub-paragraph (4), it shall not be assumed to make a change of direction of a radius less than the radius of steady turn corresponding to an angle of bank of 15°.

(7) Subject to sub-paragraph (8), the weight of the aeroplane shall be such that—

(a) at any point on the route or any planned diversion from the route, having regard to the fuel and oil expected to be consumed up to that point; and

(b) with one power unit inoperative and the other power unit or units operating within the specified maximum continuous power conditions,

the aeroplane will be capable of a rate of climb of at least K(Vso/100)2 feet per minute at an altitude not less than the minimum altitude for safe flight stated in or calculated from the information contained in the operations manual relating to the aeroplane, where Vso (the power off stalling speed of the aircraft) is in knots and K has the value of 797-1060/N, N being the number of power units installed.

(8) As an alternative to sub-paragraph (7) and subject to sub-paragraph (9), the aeroplane may be flown at an altitude from which, in the event of failure of one power unit, it is capable of reaching an aerodrome where a landing can be made in accordance with sub-paragraph (15).

(9) Subject to sub-paragraph (10), if the aeroplane is flown pursuant to sub-paragraph (8) the weight of the aeroplane shall be such that, with the remaining power unit or units operating within the specified maximum continuous power conditions, it is capable of maintaining a minimum altitude on the route to such aerodrome of 2,000 feet above all obstacles within 10 nautical miles on either side of the intended track.

(10) If the operator of the aeroplane is satisfied, taking into account the navigation aids which can be made use of by the aeroplane on the route, that the commander of the aeroplane will be able to maintain his intended track on that route within a margin of 5 nautical miles, sub-paragraph (9) shall have effect as if 5 nautical miles were substituted for 10 nautical miles and sub-paragraph (11) shall apply.

(11) If sub-paragraph (10) applies—

(a) the rate of climb, specified for the appropriate weight and altitude, used in calculating the flight path shall be reduced by an amount equal to K(Vso/100)2 feet per minute (Vso being the power off stalling speed of the aircraft);

(b) the aeroplane shall comply with the climb requirements of sub-paragraph (7) at 1,000 feet above the chosen aerodrome;

(c) account shall be taken of the effect of wind and temperature on the flight path; and

(d) the weight of the aeroplane may be assumed to be progressively reduced by normal consumption of fuel and oil.

(12) Subject to sub-paragraph (13), if—

(a) any two power units of an aeroplane having four power units shall become inoperative at any point along the route or along any planned diversion from the route; and

(b) that point is more than 90 minutes flying time (assuming all power units were to be operating) from the nearest aerodrome at which a landing can be made in compliance with sub-paragraph (15), relating to an alternate aerodrome,

the aeroplane shall be capable of continuing the flight at an altitude of not less than 1,000 feet above ground level to a point above that aerodrome.

(13) In assessing the ability of the aeroplane to satisfy sub-paragraph (12) it shall be assumed that the remaining, operative power units will operate within the specified maximum continuous power conditions, and account shall be taken of the temperature and wind conditions expected for the flight.

(14) The landing weight of the aeroplane shall not exceed the maximum landing weight specified for the altitude at the aerodrome of intended destination and at any alternate aerodrome.

(15) Subject to sub-paragraph (16), the required landing runway lengths, respectively specified as being appropriate to—

(a) the aerodrome of intended destination; and

(b) the alternate aerodrome,

shall not exceed the landing distances available on the most suitable runway for landing in still air conditions and the landing distances available on the runway that may be required for landing because of the forecast wind conditions at the aerodrome of intended destination or at any alternate aerodrome.

(16) For the purpose of sub-paragraph (15) the required landing runway lengths shall be taken to be those specified as being appropriate to—

(a) the landing weight;

(b) the altitude at the aerodrome;

(c) still air conditions in the case of the most suitable runway for a landing in still air conditions; and

(d) not more than 50 per cent. of the forecast wind component opposite to the direction of landing or not less than 150 per cent. of the forecast wind component in the direction of

landing in the case of the runway that may be required for landing because of the forecast wind conditions.

Weight and performance of public transport aeroplanes specified as aeroplanes of performance group Z – aeroplanes of which the specified maximum total weight authorised exceeds 5,700 kg or of which the specified maximum total weight authorised does not exceed 5,700 kg and the wing loading of the aeroplane exceeds 20lb per square foot or the stalling speed of the aeroplane in the landing configuration exceeds 60 knots

7.—(1) For the purposes of article 44(6), an aeroplane registered in the United Kingdom, in respect of which there is in force under article 44(5) a permission specifying the aeroplane as being of performance group Z and which comes within sub-paragraph (2), shall not fly for the purpose of public transport unless the weight of the aeroplane at the commencement of the take-off run is such that the requirements of sub-paragraphs (3), (4), (5), (6), (8), (12), (14), (15), (16), (17), (18) and (19) are met.

(2) An aeroplane comes within this sub-paragraph if—

(a) its specified maximum total weight authorised exceeds 5,700 kg; or

(b) its specified maximum total weight authorised does not exceed 5,700 kg; and either—

(i) the wing loading of the aeroplane exceeds 20 lb per square foot; or

(ii) the stalling speed of the aeroplane in the landing configuration exceeds 60 knots.

(3) One of the following requirements shall be met by the aeroplane—

(a) the wing loading of the aeroplane shall not exceed 20 lb per square foot; or

(b) the stalling speed of the aeroplane in the landing configuration shall not exceed 60 knots; or

(c) the aeroplane shall be capable of a gradient of climb of at least 1 in 200 at an altitude of 5,000 feet in the specified international standard atmosphere, with any one of its power units inoperative and the remaining power unit or units operating within the specified maximum continuous power conditions.

(4) The weight of the aeroplane at the commencement of the take-off run shall not exceed the maximum take-off weight, if any, specified for the altitude and the air temperature at the aerodrome at which the take-off is to be made.

(5) The distance required by the aeroplane to attain a height of 50 feet, with all power units operating within the specified maximum take-off power conditions shall not exceed the take-off run available at the aerodrome at which the take-off is to be made.

(6) The distance required by the aeroplane to attain a height of 50 feet with all power units operating within the specified maximum take-off power conditions, when multiplied by a factor of either 1.33 for aeroplanes having two power units or by a factor of 1.18 for aeroplanes having four power units, shall not exceed the accelerate-stop distance available at the aerodrome at which the take-off is to be made.

(7) For the purposes of sub-paragraphs (5) and (6) the distance required by the aeroplane to attain a height of 50 feet shall be that appropriate to—

(a) the weight of the aeroplane at the commencement of the take-off run;

(b) the altitude at the aerodrome;

(c) the air temperature at the aerodrome;

(d) the condition of the surface of the runway from which the take-off will be made;

(e) the slope of the surface of the aerodrome in the direction of take-off over the take-off run available and the accelerate-stop distance available, respectively; and

(f) not more than 50 per cent. of the reported wind component opposite to the direction of take-off or not less than 150 per cent. of the reported wind component in the direction of take-off.

(8) Subject to sub-paragraphs (9), (10) and (11), the take-off flight path of the aeroplane shall show that—

(a) with one power unit inoperative and the remaining power unit or units operating within the specified maximum take-off power conditions referred to in sub-paragraph (9); and

(b) with the take off path plotted from a point 50 feet above the end of the appropriate factored distance required for take-off under sub-paragraph (6) at the aerodrome at which the take-off is to be made,

the aeroplane will clear any obstacle in its path by a vertical interval of at least 35 feet except that if it is intended that an aeroplane shall change its direction by more than 15° the vertical interval shall be not less than 50 feet during the change of direction.

(9) The specified maximum take-off power conditions referred to in sub-paragraph (8)(a) are those appropriate to—

(a) the weight of the aeroplane at the commencement of the take-off run;

(b) the altitude at the aerodrome;

(c) the air temperature at the aerodrome; and

(d) not more than 50 per cent. of the reported wind component opposite to the direction of take-off or not less than 150 per cent. of the reported wind component in the direction of take-off.

(10) For the purpose of sub-paragraph (8) an obstacle shall be deemed to be in the path of the aeroplane if the distance from the obstacle to the nearest point on the ground below the intended line of flight does not exceed—

(a) a distance of 60 metres plus half the wing span of the aeroplane, plus one-eighth of the distance from such point to the end of the take-off distance available, measured along the intended line of flight; or

(b) 900 metres,

whichever is least.

(11) In assessing the ability of the aeroplane to satisfy sub-paragraph (8), it shall not be assumed the aeroplane will make a change of direction of a radius less than a radius of steady turn corresponding to an angle of bank of 15°.

(12) Subject to sub-paragraph (13), the aeroplane shall—

(a) in the meteorological conditions expected for the flight;

(b) in the event of any one power unit becoming inoperative at any point on its route or on any planned diversion from it; and

(c) with the other power unit or units, if any, operating within the specified maximum continuous power conditions,

be capable of continuing the flight, clearing obstacles within 10 nautical miles either side of the intended track, by a vertical interval of at least 1,000 feet when the gradient of the flight path is not less than zero, or 2,000 feet when the gradient of the flight path is less than zero, to an aerodrome at which it can comply with sub-paragraph (17), and on arrival over such aerodrome the flight path shall be capable of having a gradient of not less than zero at 1,500 feet above the aerodrome.

(13) For the purpose of sub-paragraph (12) the gradient of climb of the aeroplane shall be taken to be one per cent. less than that specified.

(14) In the meteorological conditions expected for the flight and at any point on its route or on any planned diversion from it the aeroplane shall be capable of climbing at a gradient of at least 1 in 50, with all power units operating within the maximum continuous power conditions specified at the following altitudes—

(a) the minimum altitudes for safe flight on each stage of the route to be flown or of any planned diversion from it specified in, or calculated from the information contained in, the operations manual relating to the aeroplane; and

(b) the minimum altitudes necessary for compliance with sub-paragraphs (12) and (15), as appropriate.

(15) If, on the route to be flown or on any planned diversion from it—

(a) the aeroplane will be engaged in a flight over water;

(b) the aeroplane may, at any point during such flight, be more than 90 minutes flying time in still air from the nearest shore; and

(c) two power units become inoperative during such time and with the other power units, if any, operating within the specified maximum continuous power conditions,

the aeroplane shall be capable of continuing the flight, having regard to the meteorological conditions expected for the flight, clearing all obstacles within 10 nautical miles either side of the intended track by a vertical interval of at least 1,000 feet and reaching an aerodrome at which a safe landing can be made.

(16) The landing weight of the aeroplane shall not exceed the maximum landing weight, if any, specified for the altitude and the expected air temperature for the estimated time of landing at the aerodrome of intended destination and at any alternate aerodrome.

(17) Subject to sub-paragraph (18), the distance required by the aeroplane to land at the aerodrome of intended destination from a height of 50 feet above the threshold of the runway shall not exceed 60 per cent. of the landing distance available on—

(a) the most suitable runway for a landing in still air conditions; and

(b) the runway that may be required for landing because of the forecast wind conditions.

(18) If an alternate aerodrome is designated in the flight plan, the landing distance required under sub-paragraph (17) at the aerodrome of intended destination shall not exceed 70 per cent. of that available on the relevant runway.

(19) The distance required by the aeroplane to land from a height of 50 feet above the threshold of the runway at any alternate aerodrome shall not exceed 70 per cent. of the landing distance available on—

(a) the most suitable runway for a landing in still air conditions; and

(b) the runway that may be required for landing because of the forecast wind conditions.

(20) For the purpose of sub-paragraphs (17) and (19) the distance required to land from a height of 50 feet above the threshold of the runway shall be taken to be that appropriate to—

(a) the landing weight;

(b) the altitude at the aerodrome;

(c) the temperature in the specified international standard atmosphere appropriate to the altitude at the aerodrome;

(d) a level surface in the case of runways usable in both directions;

(e) the average slope of the runway in the case of runways usable in only one direction;

(f) still air conditions in the case of the most suitable runway for a landing in still air conditions; and

(g) not more than 50 per cent. of the forecast wind component opposite to the direction of landing or not less than 150 per cent. of the forecast wind component in the direction of landing in the case of the runway that may be required for landing because of the forecast wind conditions.

Weight and performance of public transport aeroplanes specified as aeroplanes of performance group Z – of which the specified maximum total weight authorised does not exceed 5,700 kg and the wing loading of the aeroplane does not exceed 20lb per square foot or the stalling speed of the aeroplane in the landing configuration does not exceed 60 knots (or both)

8.—(1) For the purposes of article 44(6), an aeroplane registered in the United Kingdom, in respect of which there is in force under article 44(5) a permission specifying the aeroplane as being of performance group Z and which comes within sub-paragraph (2), shall not fly for the purpose of public transport unless the weight of the aeroplane at the commencement of the take-off run is such that the requirements of sub-paragraphs (3), (4), (5), (6), (7), (9), (11), (12), (14), (15) and (16) are met.

(2) An aeroplane comes within this sub-paragraph if its specified maximum total weight authorised does not exceed 5,700 kg and either—

(a) the wing loading of the aeroplane does not exceed 20 lb per square foot; or

(b) the stalling speed of the aeroplane in the landing configuration does not exceed 60 knots (or both).

(3) One of the following requirements shall be met by the aeroplane—

(a) the wing loading of the aeroplane shall not exceed 20 lb per square foot; or

(b) the stalling speed of the aeroplane in the landing configuration shall not exceed 60 knots; or

(c) the aeroplane shall be capable of a gradient of climb of at least 1 in 200 at an altitude of 5,000 feet in the specified international standard atmosphere, with any one of its power units inoperative and the remaining power unit or units operating within the specified maximum continuous power conditions.

(4) The weight of the aeroplane at the commencement of the take-off run shall not exceed the maximum take-off weight, if any, specified for the altitude and the air temperature at the aerodrome at which the take-off is to be made.

(5) If the aeroplane is engaged—

(a) on a flight at night; or

(b) when the cloud ceiling or visibility prevailing at the aerodrome of departure or forecast for the estimated time of landing at the aerodrome of intended destination or at any alternate aerodrome are less than 1,000 feet and one nautical mile respectively,

it shall be capable of climbing at a gradient of at least 1 in 200 at an altitude of 2,500 feet in the specified international standard atmosphere with any one of its power units inoperative and with the remaining power unit or units, if any, operating within the specified maximum continuous power conditions.

(6) The distance required by the aeroplane to attain a height of 50 feet, with all power units operating within the specified maximum take-off power conditions, shall not exceed the take-off run available at the aerodrome at which the take-off is to be made.

(7) The distance required by the aeroplane to attain a height of 50 feet, with all power units operating within the specified maximum take-off power conditions, when multiplied by a factor of 1.33, shall not exceed the accelerate-stop distance available at the aerodrome at which the take-off is to be made.

(8) For the purposes of sub-paragraphs (6) and (7) the distance required by the aeroplane to attain a height of 50 feet shall be that appropriate to—

(a) the weight of the aeroplane at the commencement of the take-off run;

(b) the altitude at the aerodrome;

(c) the temperature in the specified international standard atmosphere appropriate to the altitude at the aerodrome or, if greater, the air temperature at the aerodrome less 15° centigrade;

(d) the slope of the surface of the aerodrome in the direction of take-off over the take-off run available and the accelerate-stop distance available respectively; and

(e) not more than 50 per cent. of the reported wind component opposite to the direction of take-off or not less than 150 per cent. of the reported wind component in the direction of take-off.

(9) Subject to sub-paragraph (10), the take-off flight path of the aeroplane, with all power units operating within the specified maximum take-off power conditions, appropriate to—

(a) the weight of the aeroplane at the commencement of the take-off run;

(b) the altitude at the aerodrome;

(c) the temperature in the specified international standard atmosphere appropriate to the altitude at the aerodrome, or, if greater, the air temperature at the aerodrome less 15° centigrade;

(d) not more than 50 per cent. of the reported wind component opposite to the direction of take-off or not less than 150 per cent. of the reported wind component in the direction of take-off; and

(e) plotted from a point 50 feet above the end of the factored distance required for take-off under sub-paragraph (8), at the aerodrome at which the take-off is to be made,

shall show that the aeroplane will clear any obstacle lying within 60 metres plus half the wing span of the aeroplane on either side of its path by a vertical interval of at least 35 feet.

(10) In assessing the ability of the aeroplane to satisfy sub-paragraph (9) it shall not be assumed to make a change of direction of a radius less than a radius of steady turn corresponding to an angle of bank of 15°.

(11) The aeroplane shall be capable of continuing the flight so as to reach a point above a place at which a safe landing can be made at a suitable height for such landing—

(a) in the meteorological conditions expected for the flight;

(b) in the event of any power unit becoming inoperative at any point on its route or on any planned diversion from it; and

(c) with the other power unit or units, if any, operating within the specified maximum continuous power conditions.

(12) The aeroplane shall be capable of climbing at a gradient of at least 1 in 50, with all power units operating within the specified maximum continuous power conditions at the altitudes referred to in paragraph (13), in the meteorological conditions expected for the flight and at any point on its route or on any planned diversion.

(13) For the purpose of paragraph (12) the altitudes are—

(a) the minimum altitudes for safe flight on each stage of the route to be flown or on any planned diversion from it specified in, or calculated from, the information contained in the operations manual relating to the aeroplane; and

(b) the minimum altitudes necessary for compliance with paragraph (11).

(14) If on the route to be flown or any planned diversion from it the aeroplane will—

(a) be engaged on a flight over water;

(b) during which, at any point, it may be more than 30 minutes flying time in still air from the nearest shore; and

(c) in the event of one power unit becoming inoperative during such time and with the other power unit or units, if any, operating within the specified maximum continuous power conditions,

the aeroplane shall be capable of climbing at a gradient of at least 1 in 200 at an altitude of 5,000 feet in the specified international standard atmosphere.

(15) The landing weight of the aeroplane shall not exceed the maximum landing weight, if any, specified for the altitude and the expected air temperature for the estimated time of landing at the aerodrome of intended destination and at any alternate aerodrome.

(16) The distance required by the aeroplane to land at the aerodrome of intended destination and at any alternate aerodrome from a height of 50 feet above the threshold of the runway shall not exceed 70 per cent. or, if a visual approach and landing will be possible in the meteorological conditions forecast for the estimated time of landing, 80 per cent. of the landing distance available on—

(a) the most suitable runway for a landing in still air conditions; and

(b) the runway that may be required for landing because of the forecast wind conditions.

(17) For the purposes of sub-paragraph (16) the distance required to land from a height of 50 feet above the threshold of the runway shall be taken to be that appropriate to—

(a) the landing weight;

(b) the altitude at the aerodrome;

(c) the temperature in the specified international standard atmosphere appropriate to the altitude at the aerodrome;

(d) a level surface in the case of runways usable in both directions or the average slope of the runway in the case of runways usable in only one direction; and either

(e) still air conditions in the case of the most suitable runway for a landing in still air conditions; or

(f) not more than 50 per cent. of the forecast wind component opposite to the direction of landing or not less than 150 per cent. of the forecast wind component in the direction of landing in the case of the runway that may be required for landing because of the forecast wind conditions.

SCHEDULE 2

Regulation 9

HELICOPTER PERFORMANCE

Weight and performance of public transport helicopters carrying out Performance Class 1 operations

1. For the purposes of article 45(1), a helicopter registered in the United Kingdom when carrying out Performance Class 1 operations shall not fly for the purpose of public transport unless the weight of the helicopter at the commencement of take-off is such that the following requirements are met—

(a) the weight does not exceed the maximum take-off weight specified for the altitude and the air temperature at the site from which the take-off is to be made; and

(b) the landing weight of the helicopter will not exceed the maximum landing weight specified for the altitude and the expected air temperature for the estimated time of landing at the site of intended destination and at any alternate site.

Weight and performance of public transport helicopters carrying out Performance Class 2 operations

2.—(1) For the purposes of article 45(1) but subject to sub-paragraph (3), a helicopter registered in the United Kingdom when carrying out Performance Class 2 operations shall not fly for the purposes of public transport if the cloud ceiling or visibility prevailing at the departure site and forecast for the estimated time of landing at the site of intended destination and at any alternate site are less than 500 feet and 1,000 metres respectively and shall not fly for the purpose of public transport at any other time unless all of the requirements referred to in sub-paragraph (2) are met.

(2) The requirements referred to in sub-paragraph (1) are that the weight of the helicopter at the commencement of take-off shall be such that—

(a) the weight does not exceed the maximum take-off weight specified for the altitude and the air temperature at the site from which the take-off is to be made; and

(b) the landing weight of the helicopter will not exceed the maximum landing weight specified for the altitude and the expected air temperature for the estimated time of landing at the site at which it is intended to land and at any alternate site.

(3) This paragraph shall not apply to a helicopter flying under and in accordance with the terms of a police air operator's certificate.

Weight and performance of public transport helicopters carrying out Performance Class 3 operations

3.—(1) For the purposes of article 45(1) but subject to sub-paragraph (3), a helicopter registered in the United Kingdom when carrying out Performance Class 3 operations shall not fly for the purposes of public transport at night or out of sight of the surface or when the cloud ceiling or visibility prevailing at the departure site and forecast for the estimated time of landing at the site of intended destination are less than 600 feet and 1,000 metres respectively and shall not fly for the purpose of public transport at any other time unless all of the requirements referred to in sub-paragraph (2) are met.

(2) The requirements referred to in sub-paragraph (1) are that the weight of the helicopter at the commencement of take-off shall be such that—

(a) the weight does not exceed the maximum take-off weight specified for the altitude and the air temperature at the site from which the take-off is to be made; and

(b) the landing weight of the helicopter will not exceed the maximum landing weight specified for the altitude and the expected air temperature for the estimated time of landing at the site of intended destination and at any alternate site.

(3) This paragraph shall not apply to a helicopter flying under and in accordance with the terms of a police air operator's certificate.

SECTION 4 THE AIR NAVIGATION (COSMIC RADIATION) (KEEPING OF RECORDS) REGULATIONS 2000

Made 18th May 2000

Laid before Parliament 23rd May 2000

Coming into force 15th June 2000

The Secretary of State for the Environment, Transport and the Regions in exercise of the powers conferred by article 67 of the Air Navigation (No. 2) Order 1995[(a)] and all other powers enabling him in that behalf, hereby makes the following Regulations:

Commencement and citation

1 (1) These Regulations may be cited as the Air Navigation (Cosmic Radiation) (Keeping of Records) Regulations 2000 and shall come into force on 15th June 2000.

(2) In these Regulations 'the 1995 Order' means the Air Navigation (No. 2) Order 1995.

Period and requirements of the record of assessment

2 (1) The record of the exposure to cosmic radiation of air crew assessed under article 65A of the 1995 Order and required to be kept under article 67(1) of that Order shall meet the requirements of this regulation and in addition, as the case may be, the requirements of either paragraph (1) or paragraph (2) of regulation 3.

(2) A record kept under article 67(1) of the 1995 Order shall contain details of the assessment of the exposure to cosmic radiation for a period of at least twelve months, but not details of exposure before the coming into force of these Regulations.

(3) A record kept under article 67(1) of the 1995 Order shall be available for production as a paper record for a period of two years from the date each assessment was made, except that where the assessment shows that an individual is liable to cosmic radiation exposure in excess of 6 milliSieverts per year the record shall be available as a paper record until whichever is the later of either -

(a) the 75th anniversary of his birth, whether or not he has survived to that date, or

(b) the 30th anniversary of the termination of his work which involved exposure to cosmic radiation.

3 (1) When an undertaking separately assesses the exposure to cosmic radiation of the individual members of the air crew, the undertaking shall keep a record of the exposure to cosmic radiation for each member of air crew assessed under article 65A of the 1995 Order, which record shall include -

(a) the name and national insurance number of the member of the air crew;

(b) the detail of each assessment of exposure expressed in milliSieverts per year; and

(c) the date of the assessment.

(2) When an undertaking does not separately assess the exposure to cosmic radiation of the individual members of the air crew, but instead assesses the exposure to cosmic radiation of groups of air crew members the undertaking shall keep a single record for all the air crew assessed under article 65A of the 1995 Order, which record shall state -

(a) the names and national insurance numbers of all air crew covered by the assessment;

(b) the maximum dose of cosmic radiation expressed in milliSieverts per year to which those air crew are liable to be exposed;

(a) S.I. 1995/1970 as amended by S.I. 2000/1104.

(c) how the dose in paragraph (b) is calculated; and

(d) the period for which the assessment is valid.

Signed by authority of the Secretary of State
for the Environment, Transport and the Regions

Chris Mullin
Department of the Environment, Transport and the Regions

18th May 2000

SECTION 5 RESTRICTION OF FLYING

The Air Navigation (Restriction of Flying) (Scottish Highlands) Regulations 2008[(a)]

Made 1st May 2008

Coming into Force 1st June 2008

The Secretary of State for Transport deems it necessary in the public interest to restrict flying in the Scottish Highlands and certain approaches to the Scottish Highlands and, in exercise of her powers under article 96 of the Air Navigation Order 2005[(b)] makes the following Regulations:

1 These Regulations may be cited as the Air Navigation (Restriction of Flying) (Scottish Highlands) Regulations 2008 and come into force on 1st June 2008.

2 The Air Navigation (Restriction of Flying) (Scottish Highlands) Regulations 1981[(c)] are revoked.

3 (1) In Regulations 4, 5 and 6 all times referred to are local time.

(2) The notified authority referred to in Regulation 7 is the Low Flying Booking Cell at RAF Wittering or such other authority as may be notified in its place.

4 Subject to Regulation 7, between 1500 and 2300 hours each day on or between Monday and Thursday, an aircraft must not fly at or below a height of 5,000 feet above mean sea level within the area bounded by straight lines joining successively the following points:

583000N	0032700W
582524N	0032509W
580345N	0041234W
580300N	0043000W
580000N	0043700W
574700N	0042500W
573900N	0043000W
573800N	0044500W
573000N	0043800W
571800N	0045200W
571100N	0045300W
570900N	0050000W
570000N	0050200W
565400N	0050500W
565600N	0054700W
571300N	0053500W
575000N	0054300W
580000N	0051500W
583000N	0044900W
583000N	0043000W
582500N	0043000W
583000N	0042000W
583000N	0032700W.

5 Subject to Regulation 7, between 1500 and 2300 hours each day on or between Monday and Thursday, an aircraft must not fly at or between 750 feet and 5,000 feet above mean sea level within the area bounded by straight lines joining successively the following points:

(a) S.I. 2008/1239
(b) S.I. 2005/1970 to which there are amendments not relevant to these Regulations.
(c) S.I. 1981/1171.

575000N	0054300W
574004N	0054050W
573840N	0055739W
570000N	0055644W
570000N	0061504W
574715N	0061637W
575000N	0054300W.

6 (1) Subject to paragraph (2) and Regulation 7, between 1500 and 2300 hours each day on or between Monday and Thursday, an aircraft must not fly below 2,000 feet above mean sea level within either of the following areas bounded respectively by straight lines joining successively the following points:

582218N	0033224W
581434N	0031929W
581121N	0032654W
581900N	0033940W
582218N	0033224W; or

574900N	0040606W
574500N	0040254W
574234N	0041056W
573900N	0043000W
574700N	0042500W
574900N	0040606W.

(2) An aircraft may fly within an area specified in paragraph (1) if it is flying in accordance with an authorisation to cross the area given by the person in charge of Tain Range Danger Area on the notified frequency.

7 An aircraft may fly within an area specified in Regulation 4, 5 or 6 if it is flying in accordance with an authorisation given by the notified authority.

Signed by authority of the Secretary of State

Jim Fitzpatrick
Parliamentary Under Secretary of State
Department for Transport

1 May 2008

The Air Navigation (Restriction of Flying) (Scampton) Regulations 2000[a]

Made 20 December 2000

Coming into force 3 January 2001

Whereas the Secretary of State for the Environment, Transport and the Regions deems it necessary in the public interest to restrict flying in the vicinity of Scampton, by reason of the intended training flights by the Red Arrows team and having been informed that the Red Arrows team is permanently relocating to Scampton:

Now, therefore, the Secretary of State for the Environment, Transport and the Regions, in exercise of the powers conferred by Article 85 of the Air Navigation Order 2000[b] and of all other powers enabling him in that behalf, hereby makes the following Regulations:

8 These Regulations may be cited as the Air Navigation (Restriction of Flying) (Scampton) Regulations 2000 and shall come into force on 3 January 2001.

9 The Air Navigation (Restriction of Flying) (Scampton) Regulations 1996[c] are hereby revoked.

10 At any time when Scampton Airfield is notified as being open for use by aircraft, no aircraft shall fly below a height of 9,500 ft above mean sea level over any part of the area bounded by a circle having a radius of 5 nautical miles centred at 531828N 0003303W (Scampton), unless the commander of an aircraft has been informed by the air traffic control unit at Waddington that no training flights are intended to be made over that area by the Red Arrows team during the period when the aircraft in question is to be over the area.

Signed by authority of the Secretary of State
for the Environment, Transport and the Regions

Head of Civil Aviation Division
Department of the Environment
Transport and the Regions

December 2000

(a) SI 2000/3390
(b) SI 2000/1562
(c) SI 1996/209

STATUTORY INSTRUMENTS

2007 No.1929

CIVIL AVIATION

The Air Navigation (Restriction of Flying) (Nuclear Installations) Regulations 2007

Made - - - -	*5th July 2007*
Coming into force - -	*1st August 2007*

The Secretary of State for Transport deems it necessary in the public interest to restrict flying in the vicinity of certain nuclear installations specified in the Second Schedule.

The Secretary of State for Transport, in exercise of his powers under article 96 of the Air Navigation Order 2005(a), makes the following Regulations:

1. These Regulations may be cited as the Air Navigation (Restriction of Flying) (Nuclear Installations) Regulations 2007 and come into force on 1st August 2007.

2. The Regulations specified in the First Schedule are revoked.

3.—(1) This regulation applies to each of the nuclear installations specified in Column 1 of the Second Schedule, each of which for the purpose of this regulation is taken to comprise an area bounded by a circle of the radius specified in Column 2 of that Schedule opposite its name and centred on the position specified in Column 3 of the Schedule.

(2) Subject to regulations 4 to 13, no aircraft is to fly over a nuclear installation to which this regulation applies below the height above mean sea level specified in Column 4 of the Second Schedule opposite its name.

4.—(1) Regulation 3 does not prohibit at a nuclear installation specified in paragraph (2), flight for the purpose of landing at or taking off from the helicopter landing area at the installation with the permission of the person in charge of the installation and in accordance with any conditions to which that permission is made subject.

(2) Paragraph (1) applies to the nuclear installations at Aldermaston, Barrow-in-Furness, Berkeley, Bradwell, Burghfield, Chapelcross, Dungeness, Hartlepool, Harwell, Heysham, Hunterston, Hinkley Point, Oldbury, Sellafield, Sizewell, Springfields, Torness, Trawsfynydd and Wylfa.

5. Regulation 3 does not prohibit at the nuclear installation at Devonport—

(a) flight by a helicopter for the purpose of landing at or taking off from HM Naval Base Plymouth Weston Mill Lake Helicopter Landing Site with the permission of Flag Officer Sea Training and in accordance with any conditions to which that permission is made subject; or

(a) S.I. 2005/1970, to which there are amendments not relevant to these Regulations.

(b) flight by a helicopter for the purpose of landing at or taking off from any ship within the Devonport Dockyard with the permission of Flag Officer Sea Training and in accordance with any conditions to which that permission is made subject.

6. Regulation 3 does not prohibit at the nuclear installation at Dungeness, flight by an aircraft which has taken off from or intends to land at London Ashford (Lydd) Airport flying in accordance with normal aviation practice which remains at least 1.5 nautical miles from the position specified in Column 3 of the Second Schedule.

7. Regulation 3 does not prohibit at the nuclear installation at Hinkley Point, flight by a helicopter flying within the Bridgewater Bay Danger Area(a) with the permission of the person in charge of that Area and in accordance with any conditions to which that permission is made subject which remains at least 1 nautical mile from the position specified in Column 3 of the Second Schedule.

8. Regulation 3 does not prohibit at the nuclear installation at Rosyth, flight within the route notified as the Kelty Lane for the purpose of making an approach to land at, or a departure from, Edinburgh Airport.

9. Regulation 3 does not prohibit at the nuclear installation at Springfields—

(a) flight at a height of not less than 1,670 feet above mean sea level for the purpose of landing at Blackpool Airport; or

(b) flight in airspace lying south of a straight line drawn from 534644N 0024454W to 534513N 0025044W for the purpose of landing at or taking of from Warton Aerodrome.

10. Regulation 3 does not prohibit at the nuclear installation at Wylfa, flight at a height of not less than 2000 feet above ground level whilst operating under and in accordance with a clearance from the air traffic control unit at RAF Valley.

11. Regulation 3 does not prohibit at the nuclear installation at Bradwell, flight at a height of not less that 1500 feet above mean sea level whilst conducting an instrument approach procedure at London Southend Airport.

12. Regulation 3 does not prohibit at the nuclear installation at Hartlepool, flight at a height of not less than 1800 feet above mean sea level whilst conducting an instrument approach procedure at Durham Tees Valley Airport.

13. Regulation 3 does not prohibit at the nuclear installation at Coulport/Faslane—

(a) flight by a helicopter for the purpose of landing at or taking off from HM Naval Base Clyde Helicopter Landing Site with the permission of the Naval Base Commander Clyde and in accordance with any conditions to which that permission is made subject; or

(b) flight by a helicopter for the purpose of landing at or taking off from any ship within the HM Naval Base Clyde with the permission of the Naval Base Commander Clyde and the Queen's Harbour Master for Faslane and in accordance with any conditions to which that permission is made subject.

Signed by authority of the Secretary of State for Transport

Jim Fitzpatrick
Parliamentary Under Secretary of State
Department for Transport

5th July 2007

SCHEDULE 2

Regulation 3(1

Column 1 *Name of Nuclear Installation*	*Column 2* *Radius in nautical miles*	*Column 3* *Position (centre of circle)*	*Column 4* *Height in feet abov mean sea level*
Aldermaston	1.5	512203N 0010847W	2400
Barrow-in-Furness	0.5	540635N 0031410W	2000
Berkeley	2	514134N 0022936W	2000
Bradwell	2	514432N 0005352E	2000
Burghfield	1	512424N 0010125W	2400
Capenhurst	2	531550N 0025708W	2200
Chapelcross	2	550059N 0031334W	2400
Coulport/Faslane	2	560331N 0045159W	2200
Devonport	1	502317N 0041114W	2000
Dounreay	2	583435N 0034434W	2100
Dungeness	2	505449N 0005717E	2000
Hartlepool	2	543807N 0011049W	2000
Harwell	2	513430N 0011905W	2500
Heysham	2	540147N 0025452W	2000
Hinkley Point	2	511233N 0030749W	2000
Hunterston	2	554317N 0045338W	2000
Oldbury	2	513852N 0023415W	2000
* Rosyth	0.5	560147N 0032703W	2000
Sellafield	2	542505N 0032944W	2000
Sizewell	2	521250N 0013707E	2000
Springfields	2	534634N 0024815W	2100
Torness	2	555806N 0022431W	2100
Trawsfynydd	2	525529N 0035655W	2700
Winfrith	1	504052N 0021535W	1000
Wylfa	2	532458N 0042852W	2100

* SI 2008/3169

The Air Navigation (Restriction of Flying) (Prisons) Regulations 2001[(a)]

Made 18th April 2001

Coming into force 11th May 2001

Whereas the Secretary of State, for a reason affecting the public interest, deems it necessary in the public interest to restrict flying in the vicinity of certain prisons specified in the Second Schedule hereto:

Now therefore the Secretary of State, in exercise of the powers conferred on him by article 85 of the Air Navigation Order 2000[(b)] and of all other powers enabling him in that behalf, hereby makes the following Regulations:

11 These Regulations may be cited as the Air Navigation (Restriction of Flying) (Prisons) Regulations 2001 and shall come into force on 11th May 2001.

12 The Regulations specified in the First Schedule hereto are hereby revoked.

13 (1) This regulation applies to each of the prisons specified in column 1 of the Second Schedule hereto, each of which for the purpose of this regulation shall be taken to comprise either an area bounded by a circle of the radius specified in column 2 of the said Schedule opposite its name centred on the position so specified in column 3 of the
* said Schedule or in the case of Belmarsh and Frankland the area described in column 2 of the said Schedule.

(2) Subject to paragraph (3), no helicopter shall fly over a prison to which this regulation applies below such height above mean sea level as is specified in column 4 of the said Schedule opposite its name.

(3) Nothing in this regulation shall prohibit:

* (a) (deleted);

(b) flight by any helicopter operated by or on behalf of a police force for any area of the United Kingdom; or

(c) in relation to the high security prison at Belmarsh; flight by any helicopter flying in accordance with the Instrument Flight Rules and in accordance with instructions given by the air traffic control unit at London City airport.

** (d) in relation to the prison at Maghaberry, flight by any aircraft for the purpose of landing at or taking off from Belfast International Airport, being an aircraft which is under the control of the air traffic control unit at that Airport.

Signed by authority of the Secretary of State
for the Environment, Transport and the Regions

Ian McBrayne
Head of Civil Aviation Division
Department of the Environment,
Transport and the Regions

18th April 2001

(a) SI 2001/1657
(b) SI 2000/1562; to which there are amendments not relevant to these Regulations.
* SI 2004/1250
** SI 2007/2377

THE FIRST SCHEDULE
REVOCATIONS

Regulation 2

Regulations revoked	References
The Air Navigation (Restriction of Flying) (High Security Prisons) Regulations 1989	S.I. 1989/2118
The Air Navigation (Restriction of Flying) (High Security Prisons) (Amendment) Regulations 1991	S.I. 1991/1679
The Air Navigation (Restriction of Flying) (High Security Prisons) (Amendment No. 2) Regulations 1992	S.I. 1992/1876
The Air Navigation (Restriction of Flying) (High Security Prisons) (Amendment No. 3) Regulations 1993	S.I. 1993/2123

THE SECOND SCHEDULE

Regulation 3

	Column 1 Name of High Security Prison	Column 2 Radius in Nautical Miles or Description of Area	Column 3 Position	Column 4 Height in Feet
*				
	Belmarsh	513020N 0000529E, thence by a straight line to 512943N 0000454E; thence in an anti clockwise direction by an arc of a circle having a radius of 0.5 nautical miles and centred on 512951N 0000541E to 513020N 0000529E		2,000
*				
	Full Sutton	2	535837N 0005224W	2,000
	Frankland	544859N 0013617W; thence clockwise by an arc of a circle having a radius of 2 nautical miles whose centre is at 544820N 0013301W to 544741N 0012945W; thence by a straight line to 544544N 0013054W; thence clockwise by an arc of a circle having a radius of 2 nautical miles whose centre is at 544623N 0013410W; to 544702N 0013726W; thence by a straight line to 544859N 0013617W	–	2,200
*				
	Long Lartin	2	520627N 0015119W	2,200
**	Maghaberry	2	N5430.88 W00611.10	2,000
	Manchester	1	532934N 0021450W	1,700
	Shotts	2	554950N 0034935W	2,800
	Wakefield	1.3	534057N 0013034W	1,600
	Whitemoor	2	523430N 0000446E	2,000
	Woodhill	1.5	520049N 0004813W	2,400

* SI 2004/1250
** SI 2007/2377

The Air Navigation (Restriction of Flying) (Highgrove House) Regulations 1991[(a)]

Whereas the Secretary of State for Transport, for a reason affecting the public interest deems it necessary in the public interest to restrict flying in the vicinity of Highgrove House:

Now therefore the Secretary of State for Transport, in exercise of the powers conferred on him by article 74 of the Air Navigation Order 1989[(b)] and of all other powers enabling him in that behalf, hereby makes the following regulations:

14 These Regulations may be cited as the Air Navigation (Restriction of Flying) (Highgrove House) Regulations 1991 and shall come into force on 7th March 1991.

15 Helicopters and microlight aeroplanes shall not fly below 2000 feet above mean sea level within the area bounded by a circle having a radius of 1.5 nautical miles centred on N5137.30 W00210.75 (Highgrove House):

Provided that nothing in this regulation shall apply to a flight by any helicopter:

* (a) in the service of the Gloucestershire Constabulary;

(b) belonging to or exclusively employed in the service of Her Majesty; or

(c) visiting Highgrove House at the invitation of the person in charge of the household at Highgrove House, where the Gloucestershire Constabulary have been informed in advance of such visit.

(a) SI 1991/44

(b) SI 1989/2004 to which there are amendments not relevant to these Regulations

* SI 1991/560

The Air Navigation (Restriction of Flying) (Specified Area) Regulations 2005

Coming into force 1 April 2005

Whereas the Secretary of State for Transport deems it necessary in the public interest to restrict flying in the area specified in the Schedule hereto:

Now, therefore, the Secretary of State for Transport, in exercise of the powers conferred upon him by article 85 of the Air Navigation Order[(a)] hereby makes the following Regulations:

Citation and commencement

1 These Regulations may be cited as the Air Navigation (Restriction of Flying) (Specified Area) Regulations 2005 and shall come into force on 1 April 2005.

Flight within specified area

2 Except with the permission in writing of the Civil Aviation Authority and in accordance with any conditions therein specified a helicopter shall not fly over the area specified in the Schedule below such height as would enable it to alight clear of the area in the event of failure of a power unit.

SCHEDULE **Regulation 2**

The Specified Area

The area bounded by straight lines joining successively the following points:

Kew Bridge (N5129.18 W00017.17);

The Eastern extremity of Brent Reservoir (N5134.30 W00014.02);

Gospel Oak Station (N5133.27 W00008.97);

The South East corner of Springfield Park (N5134.12 W00003.20);

Bromley-by-Bow Station (N5131.47 W00000.65);

The South West corner of Hither Green (N5126.72 W00000.63);

Herne Hill Station (N5127.18 W00006.07);

Wimbledon Station (N5125.23 W00012.27);

The North West corner of Castelnau Reservoir (N5128.87 W00014.03);

Kew Bridge (N5129.18 W00017.17):

excluding so much of the bed of the River Thames as lies within that area between the ordinary high water marks on each of its banks.

(a) S.I.2000/1562 to which there are amendments not relevant to these Regulations

The Air Navigation (Restriction of Flying) (Hyde Park) Regulations 2004

Coming into force 28th October 2004

Whereas the Secretary of State for Transport deems it necessary in the public interest to restrict flying in airspace in the vicinity of Hyde Park, London:

Now therefore the Secretary of State for Transport, in exercise of the powers conferred by article 85 of the Air Navigation Order 2000[(a)], hereby makes the following Regulations:

1 These Regulations may be cited as the Air Navigation (Restriction of Flying) (Hyde Park) Regulations 2004 and shall come into force on 28th October 2004.

2 (1) Subject to paragraph (2), no aircrat shall fly below 1400 feet above mean sea level within the area bounded by:

(a) straight lines joining the following points:

513212N 0000911W; and

513020N 0000648W;

(b) the clockwise arc of a circle having a radius of 0.55 nautical miles centred at 513000N 0000730W between 513020N 0000648W and 513001N 0000637W;

(c) straight lines joining the following points:

513001N 0000637W; and

512917N 0000634W;

(d) the clockwise arc of a circle having a radius 0.55 nautical miles centred at 512915N 0000726W between 512917N 0000634W and 512917N 0000819W;

(e) straight lines joining the following points:

512917N 0000819W; and

512939N 0001132W;

(f) the clockwise arc of a circle having a radius 0.55 nautical miles centred at 513011N 0001123W between 512939N 0001132W and 513028N 0001209W;

(g) straight lines joining the following points:

513028N 0001209W; and

513208N 0001038W;

(h) the clockwise arc of a circle having a radius 0.55 nautical miles centred at 513151N 0000952W between 513208N 0001038W and 513212N 0000911W;

(2) Paragraph (1) shall not apply to:

(a) any aircraft in the service of the Chief Officer of Police for the Metropolitan Police District;

(b) any aircraft flying in accordance with a Special Flight Notification issued by the appropriate air traffic control unit;

(c) any helicopter flying on Helicopter Route 4; and

(d) any aircraft flying in accordance with an Enhanced Non-Standard Flight clearance issued by the appropriate air traffic control unit.

(a) S.I. 2000/1562; to which there are amendments not relevant to these Regulations.

The Air Navigation (Restriction of Flying) (Isle of Dogs) Regulations 2004

Coming into force 28th October 2004

Whereas the Secretary of State for Transport deems it necessary in the public interest to restrict flying in airspace in the vicinity of Isle of Dogs, London:

Now therefore the Secretary of State for Transport, in exercise of the powers conferred by article 85 of the Air Navigation Order 2000[(a)], hereby makes the following Regulations:

3 These Regulations may be cited as the Air Navigation (Restriction of Flying) (Isle of Dogs) Regulations 2004 and shall come into force on 28th October 2004.

4 (1) Subject to paragraph (2), no aircrat shall fly below 1400 feet above mean sea level within the area bounded by:

(a) straight lines joining the following points:

513035N 0000025W;

512954N 0000033W; and

512938N 0000022W;

(b) the clockwise arc of a circle having a radius of 0.3 nautical miles centred at 512931N 0000049W between 512938N 0000022W and 512921N 0000113W;

(c) straight lines joining the following points:

512921N 0000113W; and

513000N 0000154W;

(d) the clockwise arc of a circle having a radius of 0.55 nautical miles centred at 513018N 0000110W between 513000N 0000154W and 513035N 0000025W;

(2) Paragraph (1) shall not apply to:

(a) any aircraft in the service of the Chief Officer of Police for the Metropolitan Police District;

(b) any aircraft flying in accordance with a Special Flight Notification issued by the appropriate air traffic control unit;

(c) any helicopter flying on Helicopter Route 4;

(d) any aircraft flying in accordance with an Enhanced Non-Standard Flight clearance issued by the appropriate air traffic control unit; and

(e) any aircraft approaching to, or departing from, London (City) Airport.

(a) S.I. 2000/1562; to which there are amendments not relevant to these Regulations.

The Air Navigation (Restriction of Flying) (City of London) Regulations 2004

Coming into force 28th October 2004

Whereas the Secretary of State for Transport deems it necessary in the public interest to restrict flying in airspace in the vicinity of the City of London:

Now therefore the Secretary of State for Transport, in exercise of the powers conferred by article 85 of the Air Navigation Order 2000[(a)], hereby makes the following Regulations:

5 These Regulations may be cited as the Air Navigation (Restriction of Flying) (City of London) Regulations 2004 and shall come into force on 28th October 2004.

6 (1) Subject to paragraph (2), no aircraft shall fly below 1400 feet above mean sea level within the area bounded by straight lines joining the following points:

513125N 0000547W;

513118N 0000439W; and

513043N 0000418W;

513016N 0000433W;

513037N 0000704W;

513108N 0000653W; and

513125N 0000547W.

(2) Paragraph (1) shall not apply to:

(a) any aircraft in the service of the Chief Officer of Police for the Metropolitan Police District;

(b) any aircraft flying in accordance with a Special Flight Notification issued by the appropriate air traffic control unit;

(c) any helicopter flying on Helicopter Route 4; and

(d) any aircraft flying in accordance with an Enhanced Non-Standard Flight clearance issued by the appropriate air traffic control unit.

(a) SI 2000/1562; to which there are amendments not relevant to these Regulations.

The Air Navigation (Restriction of Flying) (London Stansted Airport) (No. 2) Regulations 2009

Expired.

SECTION 6 THE CIVIL AVIATION AUTHORITY REGULATIONS 1991

ARRANGEMENT OF REGULATIONS

PART I GENERAL

1 Citation and commencement

2 Revocation

3 Interpretation

4 Service of documents

5 Publication by the Authority

PART II FUNCTIONS CONFERRED ON THE AUTHORITY BY OR UNDER AIR NAVIGATION ORDERS

6 Regulation of the conduct of the Authority

7 Reasons for decision

8 Inspection of aircraft register

9 Dissemination of reports of reportable occurrences

10–14 Substitution of a public use aerodrome licence for an ordinary aerodrome licence or of an ordinary aerodrome licence for a public use aerodrome licence

PART III AIR TRANSPORT LICENSING

15 Regulation of the conduct of the Authority

16 Application for the grant, revocation, suspension or variation of licences

17 Revocation, suspension or variation of licences without application being made

18 Variation of schedules of terms

19 Environmental cases

20 Objections and representations

21 Consultation by the Authority

22 Furnishing of information by the Authority

23 Preliminary meetings

24 Preliminary hearings of allegations of behaviour damaging to a competitor

25 Hearings in connection with licences

26 Procedure at hearings

27 Appeals to the Secretary of State

28 Appeals from decisions after preliminary hearings of allegations of behaviour damaging to a competitor

29 Decisions on appeals

30 Transfer of licences

31 Surrender of licences

* **PART IIIA REFERENCES IN RESPECT OF AN AIR TRAFFIC SERVICES LICENCE**

31A Determination by the Authority

31B Representations

31C Hearings in connection with licence

31D Procedure at hearings

31E Determination by Authority and appeal to the Secretary of State

31F Decision by Secretary of State on appeal

PART IV OTHER FUNCTIONS OF THE AUTHORITY

32 Participation in civil proceedings

The Secretary of State for Transport, in exercise of his powers under sections 2(3), 7(1) and (2), 11(2), 64(3), 65(1) and (6), 66(1) and (4), 67(1), (2) and (5), 84(1), 85(1) and 102(1) and (2) of and paragraph 15 of Schedule 1 to the Civil Aviation Act 1982[(a)] and of all other powers enabling him in that behalf, and after consultation with the Council on Tribunals under section 10 of the Tribunals and Inquiries Act 1971[(b)], hereby makes the following Regulations:

(a)1982 c.16; section 7(2) was amended by the Criminal Justice Act 1982 (c.48), sections 40 and 46.
(b) 1971 c.62.

* SI 2001/2448

PART I GENERAL

Citation and commencement

1 These Regulations may be cited as the Civil Aviation Authority Regulations 1991 and shall come into force on 1st September 1991.

Revocation

2 The Regulations specified in the Schedule hereto are hereby revoked.

Interpretation

3 (1) In these Regulations unless the context otherwise requires:

'the Act' means the Civil Aviation Act 1982;

'the Authority' means the Civil Aviation Authority;

'decision date' and 'transcript date' have the meanings respectively assigned to them in regulation 26(8);

'environmental application' and 'environmental proposal' have the meanings respectively assigned to them in regulation 19(1);

'hearing' or 'preliminary hearing' means a hearing or preliminary hearing at which oral evidence or argument may be heard and 'to hear' shall be construed accordingly;

* 'operating licence' means an operating licence granted by the CAA under Regulation (EC) No 1008/2008 of the European Parliament and of the Council of 24th September 2008 on common rules for the operation of air services in the Community;

'ordinary aerodrome licence' means an aerodrome licence granted under an Air Navigation Order which does not include a public use condition;

'party' in relation to a case before the Authority means for the purposes of Part II of these Regulations, a person having the right to be heard pursuant to regulation 13(1) and, for the purposes of Part III of these Regulations, a person having the right to be heard pursuant to regulation 25(1);

'party' in relation to an appeal to the Secretary of State means any of the persons specified in regulation 27(3)(c) and (d);

'the person concerned' means, in relation to the registration of aircraft, the applicant for registration or the person in whose name the aircraft is registered, as the case may be, and in relation to a certificate, licence, approval, authorisation, validation or rating, the holder or former holder of or applicant for the certificate, licence, approval, authorisation, validation or rating, as the case may be; and in relation to making air traffic directions or airspace policy directions, the person who has been directed;

** 'personnel licence' means a licence authorising a person to act as a member of a flight crew, an aircraft maintenance engineer, an air traffic controller, a student air traffic controller or an aerodrome flight information service officer;

'public use aerodrome licence' means an aerodrome licence granted under an Air Navigation Order which includes a public use condition;

* SI 2009/41
** SI 2001/2448

'public use condition' means a condition included in an aerodrome licence granted under an Air Navigation Order that the aerodrome shall at all times when it is available for the take off or landing of aircraft be so available to all persons on equal terms and conditions;

'rating' means a rating on a personnel licence;

'reportable occurrence' has the same meaning as in Article 94(2) of the Air Navigation Order 1989[(a)];

'statement of policies' means the publication of the Authority referred to in section 69 of the Act;

'statutory duties' means the duties of the Authority set out in sections 4 and 68 of the Act;

'to substitute an ordinary aerodrome licence for a public use aerodrome licence' means to vary a public use aerodrome licence by removing the public use condition and 'to substitute a public use aerodrome licence for an ordinary aerodrome licence' means to vary an ordinary aerodrome licence by adding a public use condition.

(2) Any reference in these Regulations to a numbered regulation shall be construed as a reference to the regulation bearing that number in these Regulations.

(3) Any period of time specified in these Regulations by reference to days, working days or months:

(a) where such period is expressed to begin after a particular date, shall begin on the first day after that date, and shall be inclusive of the last day unless that day falls on a Saturday, Sunday, Christmas Day, Good Friday or any other day appointed by law to be a bank holiday in any part of the United Kingdom, in which case the period shall run to the immediately following working day; and

(b) where such period is expressed to run to or expire before a particular date or event, the period shall be calculated to expire on the last working day before the particular date or the date of that event.

(4) In computing any period of time specified in these Regulations by reference to hours or working days the whole of any Saturday, Sunday, Christmas Day, Good Friday or bank holiday shall be disregarded, and for that purpose any day which is appointed by law to be a bank holiday in any part of the United Kingdom shall be treated as a bank holiday.

* | (5) (Deleted)

(a) Now revoked and replaced by the Air Navigation Order 2000

* SI 2007/3556

Service of documents

* **4** (1) Subject to regulation 31A(5)(d) anything required to be served on any person under these Regulations or under section 66(4) or 84(1) of the Act shall be set out in a notice in writing which may be served either:

(a) by delivering it to that person;

(b) by leaving it at his proper address;

(c) by sending it by post to that address; or

(d) by sending it to him at that address by telex or other similar means which produce a document containing a text of the communication, in which event the document shall be regarded as served when it is received;

and where the person is a body corporate the document may be served upon the secretary of that body.

(2) For the purposes of this regulation the proper address of any person shall, in the case of a body corporate, be the registered or principal office of that body and in any other case be the last known address of the person to be served.

Publication by the Authority

* **5** Subject to regulation 31A(5)(b) any notice or other matter (not being a schedule of terms referred to in regulation 18) required by these Regulations, or by section 11(2), 64(3), 65(1) or (6) or 85(1) of the Act, to be published shall be published by the Authority in its Official Record.

* SI 2001/2448

PART II FUNCTIONS CONFERRED ON THE AUTHORITY BY OR UNDER AIR NAVIGATION ORDERS

Regulation of the conduct of the Authority

6 (1) The functions conferred on the Authority by or under Air Navigation Orders with respect to:

(a) registration of aircraft;

(b) certification of operators of aircraft;

(c) certification of airworthiness of aircraft;

(d) noise certification;

(e) certification of compliance with the requirements for the emission by aircraft engines of unburned hydrocarbons;

(f) personnel licensing;

(g) licensing of aerodromes;

(h) validation of any certificate or licence;

(i) approval of equipment and approval or authorisation of persons;

(j) approval of schemes for the regulation of the flight times of aircraft crew;

(k) receiving reports of reportable occurrences;

* making air traffic directions;

(m) making airspace policy directions;

are hereby prescribed for the purposes of section 7(2) of the Act.

(2) Subject to paragraphs (8) and (9) of this regulation, a decision with respect to any of the matters referred to in paragraph (1) of this regulation, being a decision to register, refuse to register, cancel or amend the registration of an aircraft or to grant, refuse to grant, validate, refuse to validate, revoke, suspend, vary or refuse to vary a certificate, licence, approval, authorisation or rating, or make an air traffic direction or an airspace policy direction may be made on behalf of the Authority only by a member or employee of the Authority.

(3) Subject to paragraphs (8), (9) and (10) of this regulation, where –

(a) it is decided that it would be inexpedient in the public interest for an aircraft to be registered in the United Kingdom; or

(b) an application for the grant, validation or variation of a certificate, licence, approval, authorisation or rating has been refused or granted in terms other than those requested by the applicant;

the Authority shall serve on the applicant a notice stating the reasons for the decision, and the applicant may within 14 days after the date of service of that notice request that the case be reviewed by the Authority.

(4) Subject to paragraphs (8), (9) and (10) of this regulation, where it is proposed to –

(a) cancel the registration of an aircraft on the grounds that it would be inexpedient in the public interest for it to continue to be registered in the United Kingdom; or

*SI 2001/2448

* revoke, suspend or vary a certificate, licence, approval, authorisation, validation or rating or make an air traffic direction or an airspace policy direction under an Air Navigation Order otherwise than on the application of the holder;

the Authority shall serve on the person concerned notice of the proposal together with the reasons for it, and the person concerned may within 14 days after the date of service of that notice, serve on the Authority a request that the case be decided by the Authority and not by any other person on its behalf.

(5) Any person who has failed any test or examination which he is required to pass before he is granted or may exercise the privileges of a personnel licence may within 14 days after being notified of his failure, request that the Authority determine whether the test or examination was properly conducted.

(6) (a) The function of deciding a case where such a request as is referred to in paragraph (3), (4) or (5) of this regulation has been duly served on the Authority is hereby prescribed for the purposes of section 7(1) of the Act: and for the purpose of making any decision in such a case a quorum of the Authority shall be one member.

(b) The Authority shall sit with such technical assessors to advise it as the Authority may appoint, but the Authority shall not appoint as an assessor any person who participated in the decision or proposal or in giving or assessing the test or examination which is to be the subject of the Authority's decision.

* (7) Where a request under paragraph (3), (4) or (5) has been duly served, the Authority shall, before making a decision:

(a) consider any representations which may have been served on it by the person concerned within 21 days after the date of service of the notice under that paragraph given by the Authority; and

(b) where the person concerned has requested the opportunity to make oral representations in his representations under sub-paragraph (a) above, afford him an opportunity to make such representations and consider them.

(7A) (a) Where an oral hearing is held it shall be held in public except where the Authority is satisfied that, in the interests of morals, public order, national security, juveniles or the protection of the private lives of the parties a private hearing is required, or where it considers that publicity would prejudice the interests of justice.

(b) The following persons shall be entitled to attend the hearing of an appeal, whether or not it is in private:

(i) a member of the Council on Tribunals or of the Scottish Committee of that Council; and

(ii) any other person which the Authority, with the consent of the parties, permits to attend the hearing.

(8) Nothing in this regulation shall:

(a) prevent the Authority or any person authorised so to act on behalf of the Authority from provisionally cancelling the registration of an aircraft or provisionally suspending or varying any certificate, licence, approval, authorisation, validation or rating granted or having effect under an Air Navigation Order or making a provisional air traffic direction pending inquiry into or consideration of the case;

(b) apply to the variation of a flight manual, performance schedule or other document incorporated by reference in a certificate of airworthiness;

*SI 2001/2448

(c) apply where the Authority refuses to register or cancels or amends the registration of an aircraft or refuses to grant or validate, grants or validates in terms other than those requested by the applicant, revokes, suspends or varies a certificate, licence, approval, authorisation or rating pursuant to a direction given by the Secretary of State.

(9) Nothing in paragraphs (2), (3) or (4) of this regulation shall apply:

(a) in respect of a medical certificate or certificate of test or experience relating to a personnel licence;

(b) where pursuant to its duty under section 5 of the Act, the Authority refuses an application for the grant of an aerodrome licence or grants such an application in terms other than those requested by the applicant or proposes to revoke, suspend or vary an aerodrome licence otherwise than on the application of the holder.

(10) Nothing in paragraphs (3) or (4) of this regulation shall apply where the Authority –

(a) refuses an application by the holder of an aerodrome licence for the substitution of an ordinary aerodrome licence for a public use aerodrome licence; or

(b) proposes, otherwise than on the application of the licence holder, to substitute a public use aerodrome licence for an ordinary aerodrome licence.

Reasons for decisions

7 Where the Authority makes a decision pursuant to regulation 6(6) it shall be the duty of the Authority to serve a statement of its reasons for the decision on the person concerned.

Inspection of aircraft register

8 The Authority shall, at all reasonable times and upon payment to it of any applicable charge under section 11 of the Act for inspecting the register, make the register of aircraft available for inspection by any person.

Dissemination of reports of reportable occurrences

9 The Authority shall make available, upon payment to it of any applicable charge under section 11 of the Act, reports of reportable occurrences or a summary of such reports, to any person who is:

(a) the operator or member of the flight crew of any aircraft;

(b) engaged in the design, manufacture, repair, maintenance or overhaul of aircraft, or of parts or equipment therefor;

* the provider of an air traffic control service;

(c) the aeronautical authority of a country other than the United Kingdom, or the representative in the United Kingdom of such an authority;

(d) engaged in writing about civil aviation for publication in any newspaper, periodical, book or pamphlet;

(e) engaged in preparing a programme about civil aviation for television or radio;

(f) engaged in the study of civil aviation for any academic purpose; or

(g) any other person whose functions include the furthering of the safety of civil aviation:

*SI 2001/2448

Provided that the Authority shall not be required to make available any report or summary thereof to any person if it is satisfied that to do so will not further the safety of civil aviation.

Substitution of a public use aerodrome licence for an ordinary aerodrome licence or of an ordinary aerodrome licence for a public use aerodrome licence

10 (1) The Authority shall refuse to consider an application for the substitution of an ordinary aerodrome licence for a public use aerodrome licence unless:

(a) the application is made by the holder of the licence;

(b) it contains a statement of the grounds on which the application is made; and

(c) the application is accompanied by any applicable charge under section 11 of the Act.

(2) The Authority shall refuse to consider an application for the substitution of a public use aerodrome licence for an ordinary aerodrome licence unless:

(a) it is made by –

(i) the holder of the licence;

(ii) any other holder of an aerodrome licence granted under an Air Navigation Order;

(iii) the holder of any air operator's certificate granted under an Air Navigation Order;

* (iv) the holder of any air transport licence granted under the Act or of any operating licence; or

(v) the operator of any aircraft who satisfies the Authority that an aircraft operated by him has, during the 12 months immediately preceding the date on which the application is made, been granted or refused permission to land at or take off from the aerodrome to which the licence relates;

(b) it contains a statement of the grounds on which the application is made;

(c) the application is accompanied by any applicable charge under section 11 of the Act; and

(d) if made by someone other than the holder of the ordinary aerodrome licence, a copy of the application has been served on the holder within 24 hours after it has been served on the Authority.

(3) The Authority shall as soon as may be after an application has been served upon it in accordance with this regulation publish such particulars of the application as it thinks necessary for indicating the substance of the application and shall make a copy of the application available at its principal office for inspection by any person at any reasonable time:

Provided that nothing herein shall require the Authority to publish an application for the substitution of a public use aerodrome licence for an ordinary aerodrome licence which is made by the holder of the licence.

(4) If the Authority proposes to substitute a public use aerodrome licence for an ordinary aerodrome licence it shall serve on the holder of that licence particulars of the proposal and of the reasons for it and shall publish those particulars and reasons.

* SI 1992/2992

11 Any person may serve on the Authority an objection to or representation about an application or proposal published pursuant to regulation 10 if –

(a) he does so within 21 days after the date of publication;

(b) he serves a copy of his objection or representation on the applicant and on the holder of the aerodrome licence to which the application or proposal relates within 24 hours after it has been served on the Authority; and

(c) he states the grounds of his objection or representation.

12 Before the date fixed for the hearing of a case pursuant to regulation 13, the Authority shall serve on any person who has the right to be heard in connection with the case or whom the Authority proposes to hear a copy of, or a summary of, any information in the possession of the Authority which has been provided in connection with the case or which the Authority has reason to believe will be referred to at the hearing of the case:

Provided that before serving such information which has been provided by any other person (not being a person who has provided information in connection with the case but does not wish to be heard), the Authority shall consult that person and shall not serve any information which in its opinion relates to the commercial or financial affairs of the person who has provided it and cannot be disclosed to the prospective recipient without disadvantage to the person who has provided it which, by comparison with the advantage to the public and the prospective recipient of disclosure to him, is unwarranted.

13 (1) Before any decision is made on an application or proposal published pursuant to regulation 10 the following persons shall have a right to be heard:

(a) the applicant;

* the holder of any air transport licence or operating licence;

(c) the holder of any air operator's certificate granted under an Air Navigation Order;

(d) the holder of any aerodrome licence granted under an Air Navigation Order;

(e) such persons (being persons who wish to be heard and who have served objections or representations pursuant to regulation 11 expressing the views of operators of aircraft described in regulation 10(2)(a)(v)) as appear to the Authority to be representative of those who have served such objections or representations:

Provided that no person (other than the applicant and the holder of the licence to which the decision will relate) shall have a right to be heard unless he has served an objection or representation pursuant to regulation 11 and in so doing has stated that he wishes to be heard.

(2) Notwithstanding that a person does not have a right to be heard, the Authority may, if it thinks fit, hear him:

Provided that no person shall be heard pursuant to this paragraph unless he has served an objection or representation pursuant to regulation 11.

(3) No hearing shall be held pursuant to this regulation unless the Authority has served on all persons having a right to be heard and whom it proposes to hear in connection with the case not less than 14 days' notice of the date, time and place of the hearing, and the notice shall clearly identify the application or proposal to which it relates: a similar notice shall be published not less than 7 days before the date of the hearing, and shall be exhibited in a public place in the Authority's principal office during the 7 days immediately preceding the date of the hearing.

* SI 1992/2992

14 (1) The function of making a decision on an application or proposal published pursuant to regulation 10 is hereby prescribed for the purposes of section 7(1) of the Act, and for the purposes of making such a decision and of conducting a hearing pursuant to regulation 13 a quorum of the Authority shall be two members:

Provided that the quorum shall be one member, if the persons having the right to be heard in connection with the case have so consented.

(2) Hearings shall be conducted by the Authority, sitting with such employees of the Authority acting as advisers as it thinks fit.

(3) At a hearing every party to the case may appear in person or be represented by any other person whom he may have authorised to represent him and may produce oral and written evidence and may examine any other party to the case, any person whom the Authority hears pursuant to regulation 13(2) and any witnesses produced by any such party or person: the Authority may, to such extent as it thinks fit, permit any person heard by it pursuant to regulation 13(2) to exercise at the hearing the rights set out in this paragraph of a party to the case.

(4) Any person who has served an objection or representation pursuant to regulation 11 but who does not wish to be heard, may make a written submission which he shall serve on the Authority not less than 3 working days before the date fixed for the hearing of the case.

(5) Every hearing shall be held in public unless the Authority shall otherwise decide in relation to the whole or part of a particular case, but nothing in this regulation shall prevent a member of the Council on Tribunals or of its Scottish Committee from attending a hearing in his capacity as such.

(6) The failure of the Authority or of any person to give notice or publish any particulars in the time or manner provided for in these Regulations or any other procedural irregularity shall not invalidate the action taken by the Authority; and the Authority may, and shall if it considers that any person may have been prejudiced, take such steps as it thinks fit before reaching its decision to cure the irregularity, whether by the giving of notice or otherwise.

(7) All the proceedings at a hearing of the Authority in connection with the case shall be recorded by a shorthand writer or by some other means, and if any person requests a record of the proceedings the Authority shall cause a mechanical recording or transcript of the shorthand or other record to be made available for purchase by that person at a reasonable price:

Provided that –

(a) the Authority shall not be required to make available a mechanical recording or transcript of the record of the proceedings at any time after the expiry of one year from the day of publication of its decision of the case; and

(b) a mechanical recording or transcript of the record of proceedings conducted otherwise than in public shall only be required to be made available for purchase by any party to the case or by any other person heard by the Authority at those proceedings.

(8) The Authority shall furnish a statement of its reasons for the decision to the parties to the case and to any person whom it has heard in connection with the case:

Provided that no statement of reasons need be furnished when an application is granted on the application of the holder of the licence to which the decision relates and no objections or representations have been served pursuant to regulation 11.

(9) The Authority may exclude from its statement of reasons furnished to any person (hereinafter referred to as 'the relevant person') any matter if it considers it necessary to do so for the purpose of withholding from the relevant person information which in the opinion of the Authority relates to the commercial or financial affairs of another person and cannot be disclosed to the relevant person without disadvantage to the other person which, by comparison with the advantage to the public and the relevant person of disclosure to him, is unwarranted.

(10) The Authority may publish in such manner as it thinks fit particulars of, and its reasons for, any decision taken by it with respect to an application published pursuant to regulation 10.

PART III AIR TRANSPORT LICENSING

Regulation of the conduct of the Authority

15 (1) The function of making a decision to:

* (a) grant, revoke, suspend or vary other than provisionally an air transport licence or a route licence in a case where an objection has been served pursuant to regulation 20;

(b) grant or vary other than provisionally a licence in terms other than those requested by the applicant;

(c) refuse to grant a licence;

(d) hold or refuse to hold a preliminary hearing;

(e) provisionally vary a licence where representations have been served pursuant to regulation 24(2);

* (f) revoke or suspend an operating licence otherwise than at the request of the holder; or

(g) refuse to grant an operating licence.

is hereby prescribed for the purposes of section 7(1) of the Act.

(2) For the purposes of making any such decision as is referred to in paragraph (1)(a) to (c), (f) and (g) of this regulation and of conducting a hearing pursuant to regulation 26(1) a quorum of the Authority shall be two members unless –

(a) the Authority has dispensed with publication of the application or proposal in accordance with the proviso to regulation 16(3) or to regulation 17(2);

(b) the decision is to suspend the licence in accordance with regulation 17(3);

(c) the Authority has, in accordance with regulation 20(1), specified less than 21 days for serving an objection to or representation about the application or proposal;

(d) the Authority has, in accordance with the proviso to regulation 25(3) given the persons having a right to be heard and whom it proposes to hear in connection with the case less than 14 days' notice of the date of the hearing; or

(e) the persons having the right to be heard in connection with the case have consented to a quorum of the Authority being one member;

in which case the quorum shall be one member.

(3) For the purposes of making such a decision as is referred to in paragraph (1)(d) or (e) of this regulation and of conducting a preliminary hearing pursuant to regulation 24 a quorum of the Authority shall be one member.

* (4) Any other decision to grant, revoke, suspend or vary an air transport licence or a route licence and any other decision to grant, revoke or suspend an operating licence may be made on behalf of the Authority only by a member or employee of the Authority.

(5) The functions conferred upon the Authority by sections 64 to 67 of the Act are hereby prescribed for the purposes of section 7(2) thereof.

Application for the grant, revocation, suspension or variation of licences

* **16** (1) The Authority may refuse to consider an application for the grant, revocation, suspension or variation of an air transport licence or a route licence unless:

* SI 1992/2992

(a) subject to regulation 24, in the case of an application for the grant of a licence it has been served on the Authority not less than 6 months before the beginning of the period for which the licence is proposed to be in effect, and in any other case it has been served on the Authority not less than 6 months before the date on which it is proposed that the revocation, suspension or variation shall take effect;

(b) in the case of an application for the grant of a licence, the application contains all the particulars specified by the Authority in accordance with section 65(1) of the Act; and

(c) the application is accompanied by any applicable charge under section 11 of the Act.

(2) The Authority shall refuse to consider an application for the revocation, suspension or variation of an air transport licence or a route licence made by a person other than the holder of the licence unless a copy of the application has been served on the holder within 24 hours after it has been served on the Authority. *

(3) The Authority shall as soon as may be after an application for the grant, revocation, suspension or variation of an air transport licence or a route licence has been served upon it in accordance with this regulation publish such particulars of the application as it thinks necessary for indicating the substance of the application, and shall make a copy of the application available at its principal office for inspection by any person at any reasonable time: *

Provided that, except in the case of an environmental application,

(a) the Authority may dispense with publication in any case where it is satisfied that for reasons of urgency it is desirable to do so and it is of the opinion that to do so is unlikely to prejudice the interests of any persons of a description specified in regulation 25(1);

(b) the Authority may dispense with publication in the case of an application:

(a) for the grant of a licence for not more than four flights in any one direction between the same two places;

(b) made by its holder for the revocation or suspension of a licence;

(c) for the variation of a licence if in its opinion to do so is unlikely to prejudice the interests of any persons of a description specified in regulation 25(1).

(4) If within 12 months after the date on which objections to and representations about an application for the grant, variation, suspension or revocation of an air transport licence or a route licence must have been served on the Authority pursuant to regulation 20, the Authority has neither made a decision on the application nor given notice pursuant to regulation 25(3) of the date, time and place of the hearing of such application, it shall as soon as may be republish such particulars of the application as it thinks necessary for indicating the substance of the application and shall republish such particulars at 12 monthly intervals thereafter until such time as a decision has been made on the application or notice has been given as aforesaid pursuant to regulation 25(3). *

(5) The Authority may direct that an application shall be treated as being such number of separate applications as it may specify in the direction, and the application shall be treated accordingly.

(6) Any person of a description specified in regulation 25(1)(b) to (d) may apply to the Authority for the variation, suspension or revocation of an air transport licence or a route *

* SI 1992/2992

licence but, except as provided in regulation 18(3), no person may apply for the variation of such a schedule of terms as is mentioned in regulation 18.

Revocation, suspension or variation of licences without application being made

17 (1) Subject to paragraph (3) of this regulation, if the Authority proposes to revoke, suspend, or vary an air transport licence (other than in pursuance of an application made to it in that regard) on the ground that it is not or is no longer satisfied as to the matters specified in paragraph (a) or (b) of section 66(3) of the Act, it shall:

(a) serve on the holder of the licence not less than 21 days' notice of its intention to publish particulars of the proposal together with the reasons for its proposal;

(b) consider any representations which may be made to it by the holder of the licence before the expiration of the said notice; and

(c) as soon as may be after the expiration of the said notice or at such earlier time as the Authority and the holder of the licence may agree, publish particulars of the proposal unless it has abandoned the proposal:

Provided that the Authority may:

(i) with the consent of the holder of the licence, dispense with publication of its proposal to revoke or suspend the licence;

(ii) dispense with publication of its proposal to vary the licence if it is satisfied that the variation is unlikely to prejudice the interests of any persons of a description specified in regulation 25(1).

(2) Subject to paragraph (3) of this regulation, if the Authority proposes to revoke, suspend or vary an air transport licence on grounds other than those referred to in paragraph (1) of this regulation and otherwise than in pursuance of an application made to it in that regard, or proposes to revoke, suspend or vary a route licence otherwise than in pursuance of an application made to it in that regard, it shall publish particulars of the proposal and of the reasons for it, unless –

(a) the Secretary of State has directed the Authority to revoke, suspend or vary the licence as proposed or the proposal is made pursuant to a direction made by the Secretary of State under regulation 29(1) to re-hear the case;

(b) the Authority's duty under section 31(2) of the Airports Act 1986[(a)] (being a duty so to perform its air transport licensing functions as to secure that any traffic distribution rules in force under section 31 of the said Act are complied with) requires it to revoke, suspend or vary the licence as proposed;

(c) except in the case of an environmental proposal, the Authority is satisfied that to dispense with publication is unlikely to prejudice the interests of any person of a description specified in regulation 25(1) and the holder of the licence consents to the proposal not being published.

(3) The Authority may suspend an air transport licence notwithstanding that it has not complied with the requirements of paragraph (1) or (2) of this regulation if it has served on the holder of the licence not less than 6 working days' notice of its proposal to suspend the licence, together with its reasons for the proposal, and if, after considering any representations which may be made to it by the holder of the licence before the expiration of such notice it is not, or is no longer, satisfied as mentioned in section 66(3)(a) or (b) of the Act.

(a) 1986 c.31.

* SI 1992/2992

* (4) Before reaching a decision that it has reason to believe that the holder of an air transport licence or a route licence is neither a United Kingdom national nor such a body as is mentioned in section 65(3)(b) of the Act, the Authority shall:

(a) serve on the holder of the licence not less than 21 days' notice of its intention to consider the matter; and

(b) consider any representations which may be made to it by the holder of the licence before the expiration of the said period.

Variation of schedules of terms

18 (1) If the Authority establishes any schedule of terms and includes in any air transport licence or a route licence a term that the holder of the licence shall comply with terms set out in that schedule as varied from time to time by the Authority, the Authority may at any time propose to vary that schedule or any part thereof, and any such proposal shall for the purposes of these Regulations be treated as a proposal for the variation of every air transport licence or a route licence which contains such a term as aforesaid relating to that schedule or that part of that schedule, as the case may be.

* (2) When any air transport licence or a route licence contains such a term as aforesaid relating to a schedule, the Authority shall publish that schedule and any variation to it in its Official Record or otherwise.

(3) An application for the variation of the schedule of terms set out in a document published by the Authority and entitled the United Kingdom Cabotage Air Passenger Tariff may be made by the holder of any air transport licence or a route licence which includes a term requiring the holder of the licence to comply with that schedule of terms as varied from time to time by the Authority, and any such application shall for the purposes of these Regulations be treated as an application for the variation of every air transport licence or a route licence which contains such a term as aforesaid.

(4) The Authority shall maintain a list of the names and addresses of all persons who hold a licence which includes such a term as is referred to in paragraph (3) of this regulation and shall serve copies of that list on any person who so demands.

Environmental cases

19 (1) For the purposes of this part of these Regulations, 'environmental application' and 'environmental proposal' mean respectively an application and a proposal for the grant or variation of an air transport licence, being a licence which authorises, or which if granted would authorise, the holder to operate –

(a) a helicopter at a height of less than 3000 feet above the surface for the greater part of the distance which it flies over land; or

(b) any aircraft in circumstances which, in the opinion of the Authority, will or may cause an exceptional amount of noise, vibration, pollution or other disturbance;

but do not include –

(i) any such application or proposal which is not, in the opinion of the Authority, an application or proposal relating to a licence to operate a regular and frequent service; or

(ii) any such proposal made by the Authority to vary a licence on the ground that it is not or is no longer satisfied as to the matters specified in paragraph (a) or (b) of section 66(3) of the Act.

* SI 1992/2992

(2) If the Authority receives an environmental application or makes an environmental proposal it shall designate the case as an environmental case and publish notice of the designation.

Objections and representations

20 (1) Any person may serve on the Authority an objection to or representation about an application or proposal for the grant, revocation, suspension or variation (other than the provisional variation) of an air transport licence or a route licence if he does so:

(a) where an application or proposal is published within such period (being, subject to paragraph (2) of this regulation, not more than 21 days nor less than 7 days) as the Authority may specify when publishing the application or proposal;

(b) where the application or proposal is not published, but he has been notified by the Authority that the application or proposal has been made and will not be published, within 3 working days after being so notified:

Provided that nothing herein shall:

(i) permit the Authority to specify a period of less than 21 days for the service of objections or representations unless it is satisfied that for reasons of urgency it is desirable to do so;

(ii) permit the Authority to specify a period of less than 21 days for the service of objections or representations in a case where it has made a proposal pursuant to regulation 17, unless it has proposed to –

(a) revoke, suspend or vary an air transport licence or a route licence in accordance with a direction given by the Secretary of State.

(b) (Deleted)

(2) If the Authority receives an environmental application or makes an environmental proposal it shall specify 42 days from the date of publication of the notice of designation pursuant to regulation 19 as the period for service of objections or representations on grounds of noise, vibration, pollution or other disturbance.

(3) Where the person making the objection or representation is the holder of an air transport licence or a route licence he shall, within 24 hours after it has been served on the Authority, serve a copy of it on:

(a) the applicant;

(b) any other person who is the holder of the licence to which the application or proposal relates; and

(c) any person whom the Authority is obliged by regulation 21 to consult in respect of the application or proposal;

and where the person making the objection or representation is not the holder of an air transport licence or a route licence, the Authority shall within 7 days after the day on which the objection or representation has been served on the Authority serve a copy of it on the said persons, indicating whether the person making the objection or representation wishes to be heard pursuant to regulation 25.

(4) Upon being served as aforesaid, the applicant shall, if so required in writing by the person making the objection or representation, serve him with a copy of the application within 3 working days after being required so to do.

* SI 1992/2992

** SI 2007/3556

(5) References in this regulation to publication include references to republication pursuant to regulation 16(4), but when an application is republished, nothing in this regulation shall require a person who has served an objection to or representation about the application when it was previously published to re-serve that objection or representation.

Consultation by the Authority

21 The Authority shall not grant, refuse to grant, revoke, suspend or vary any air transport licence or a route licence authorising flights to, from or within:

* (Deleted)

(b) the Isle of Man, without consulting the Isle of Man Department of Highways, Ports and Properties; or

(c) Gibraltar, without consulting the Secretary of State;

and subject to regulation 26(5) such consultations shall be completed before the date fixed for the hearing of the case pursuant to regulation 25:

Provided that consultation as aforesaid shall not be required in a case where:

(i) the application or licence in question is for not more than four flights in any one direction between the same two places;

(ii) the Authority is acting in pursuance of its duty under section 65(2) or (3) or 66(3) of the Act;

(iii) the Authority's duty under section 31(2) of the Airports Act 1986 requires it to refuse to grant or to revoke, suspend or vary the licence; or

* the Authority is acting in pursuance of its duty under section 69A(4) of the Act.

Furnishing of information by the Authority

22 Before the date fixed for the hearing of a case pursuant to regulation 25, the Authority shall serve on any person who has the right to be heard in connection with the case or whom the Authority proposes to hear or is required to consult pursuant to regulation 21 a copy of, or a summary of, any information in the possession of the Authority which has been provided in connection with the case or which the Authority has reason to believe will be referred to at the hearing of the case:

Provided that:

(i) the Authority shall not serve any such information which has been provided by the Secretary of State if the Secretary of State has certified to the Authority that it would not be in the public interest for it to be disclosed;

(ii) before serving such information which has been provided by any other person (not being a person who has provided information in connection with the case but does not wish to be heard) the Authority shall consult that person and shall not serve any information which in its opinion relates to the commercial or financial affairs of the person who has provided it and cannot be disclosed to the prospective recipient without disadvantage to the person who has provided it which, by comparison with the advantage to the public and the prospective recipient of its disclosure to him, is unwarranted.

* SI 1992/2992
** SI 1996/1494

Preliminary Meetings

23 (1) Before the date fixed for the hearing of a case pursuant to regulation 25, the Authority may hold a preliminary meeting to discuss the conduct of the case.

(2) The Authority shall give to every party to the case and to every person whom the Authority proposes to hear in connection with the case and to any person consulted by the Authority pursuant to regulation 21 who has responded in writing notice of the date, time and place of the preliminary meeting and any such person may attend in person or be represented by any person whom he may have authorised to represent him.

(3) Preliminary meetings shall be conducted on behalf of the Authority only by a member or employee of the Authority.

Preliminary hearings of allegations of behaviour damaging to a competitor

* **24** (1) This regulation applies where the holder of any air transport licence or a route licence (hereinafter in this regulation referred to as 'the applicant') –

* has applied to the Authority for the variation of an air transport licence or a route licence held by another person (hereinafter in this regulation referred to as 'the respondent') for the purpose of restraining the respondent from engaging in behaviour damaging to the applicant's business;

(b) has included in his application a statement giving particulars of the behaviour complained of and of the extent to which the applicant's business is being or is likely to be damaged thereby;

* (c) has asked for a preliminary hearing of the application with a view to the respondent's air transport licence or a route licence being provisionally varied pending a hearing pursuant to regulation 25; and

(d) has served a copy of his application on the respondent on the same day as he has served it on the Authority.

(2) The respondent shall, within 5 working days after the date of service of the application, serve on the Authority and on the applicant any representations he may wish the Authority to take into account in determining whether to hold a preliminary hearing.

(3) The Authority shall within 10 working days after the date of service of the application notify the applicant, the respondent and any person it is obliged by regulation 21 to consult in respect of the application of the date (which shall be within 20 working days after the date of service of the application), time and place of the preliminary hearing or of the fact that it has decided not to hold a preliminary hearing.

(4) Notice of the date, time and place of a preliminary hearing shall be of such length as is reasonably practicable and shall be given by such means (whether oral or written) as the Authority thinks fit.

(5) The Authority shall hold a preliminary hearing only if, having considered the terms of the application and of any representations served on it pursuant to paragraph (2) of this regulation, it is of the opinion that –

(a) there is prima facie evidence that the behaviour complained of by the applicant is being engaged in by the respondent and that behaviour has or is likely to have the effect of seriously damaging the business of the applicant; and

(b) having regard to its statutory duties, its statement of policies and to the urgency of the matter such a hearing is warranted.

* SI 1992/2992

(6) The applicant and the respondent shall have a right to be heard at a preliminary hearing and the Authority may hear such other persons as it thinks fit.

(7) Regulations 21, 22 and 26(1), (4), (6) and (7) shall apply in relation to a preliminary hearing as they apply in relation to a hearing pursuant to regulation 25.

(8) At a preliminary hearing the applicant and the respondent shall have the same rights as a party to a case in a hearing pursuant to regulation 25 and the Authority may, to such extent as it thinks fit, permit any other person whom it decides to hear to exercise the same rights.

(9) Where any person whom the Authority is obliged by regulation 21 to consult in respect of the application attends the preliminary hearing the Authority shall give him opportunity at the preliminary hearing to make observations on the evidence and arguments advanced by the applicant and the respondent and by any other person whom the Authority has decided to hear: and where any such observations are made the Authority shall give the applicant, the respondent and any other person it has decided to hear opportunity at the preliminary hearing to respond to them.

(10) Within 5 working days after the end of the preliminary hearing the Authority shall notify the applicant and the respondent and any person it is obliged by regulation 21 to consult in respect of the application –

(a) whether or not it has decided provisionally to vary the respondent's licence;

(b) if so, the terms of the provisional variation; and

(c) the date, time and place of the hearing to be held pursuant to regulation 25;

and shall furnish its reasons for the decision, as required by section 67(2) of the Act within 10 working days after the end of the preliminary hearing.

(11) The only decision which may be taken by the Authority after a preliminary hearing is a decision provisionally to vary or to refuse provisionally to vary the respondent's air transport licence or a route licence: and if the Authority provisionally varies the respondent's licence it shall in so doing provide that the provisional variation will cease to have effect when the decision reached by the Authority following a hearing pursuant to regulation 25 takes effect.

Hearings in connection with licences

25 (1) Before any decision to grant, refuse to grant, revoke, suspend or vary (other than provisionally) an air transport licence or a route licence is made, the following persons shall have a right to be heard:

(a) the applicant;

(b) the holder of an operating licence, any air transport licence or a route licence;

(c) the holder of any air operator's certificate granted under an Air Navigation Order;

(d) the holder of any aerodrome licence granted under an Air Navigation Order;

(e) such persons (being persons who wish to be heard and who have served objections or representations pursuant to regulation 20 expressing the views of passengers or shippers of cargo) as appear to the Authority to be representative of those who have served such objections or representations;

(f) where the Authority has designated the case as an environmental case pursuant to regulation 19, such persons (being persons who wish to be heard and who have served objections or representations on grounds of noise, vibration, pollution or

* SI 1992/2992

other disturbance pursuant to regulation 20(2)) as appear to it to be representative of those who have served such objections or representations:

Provided that:

(i) no person (other than the applicant and the holder of the licence to which the decision will relate) shall have a right to be heard unless he has served an objection or representation pursuant to regulation 20 and (unless he is a person of a description specified in subparagraph (e) or (f) of this regulation) in so doing has stated that he wishes to be heard;

(ii) no person shall be heard before a decision is made by the Authority in a case where the Secretary of State has directed that the licence be granted, refused, revoked, suspended or varied or where the Authority's duty under section 31(2) of the Airports Act 1986 or under section 69A(4) of the Act requires that the licence be refused, revoked, suspended or varied.

*

(2) Notwithstanding that a person does not have the right to be heard, the Authority may, if it thinks fit, hear him:

Provided that no person shall be heard pursuant to this paragraph:

(i) unless he has served an objection or a representation pursuant to regulation 20;

(ii) in a case where such a direction as is referred to in proviso (ii) to paragraph (1) of this regulation has been given.

(3) No hearing shall be held pursuant to this regulation unless the Authority has served on all persons having a right to be heard and whom it proposes to hear in connection with the case and on any person who has been consulted by the Authority pursuant to regulation 21 and who has responded in writing not less than 14 days' notice of the date, time and place of the hearing, and the notice shall clearly identify the application or proposal to which it relates: a similar notice shall be published not less than 7 days before the date of the hearing, and shall be exhibited in a public place in the Authority's principal office during the 7 days immediately preceding the date of the hearing:

Provided that in cases where the Authority is satisfied that for reasons of urgency it is desirable to do so, a hearing may be held without such notice having been served, published and exhibited as aforesaid if the Authority has given notice of the date, time and place of the hearing, being notice of such length and by such means (whether oral or written) as it thinks fit, to the applicant and any person of a description specified in paragraph (1) of this regulation whose interests are in the opinion of the Authority likely to be prejudiced by the granting of the application and to any person consulted by the Authority pursuant to regulation 21.

(4) Two or more cases may be heard together, if the Authority thinks fit, but a party to one case shall not on that account be deemed to be a party to any other case.

Procedure at hearings

26 (1) Hearings shall be conducted by the Authority, sitting with such employees of the Authority acting as advisers as it thinks fit.

(2) At a hearing every party to a case may appear in person or be represented by any other person whom he may have authorised to represent him, and may produce oral and written evidence and may examine any other party to that case, any person whom the Authority hears pursuant to regulation 25(2) and any witnesses produced by any such party or person: the Authority may, to such extent as it thinks fit, permit any person

* SI 1992/2992

heard by it pursuant to regulation 25(2) to exercise at the hearing the rights set out in this paragraph of a party to the case.

(3) Any person who has served an objection or representation pursuant to regulation 20 but who does not wish to be heard, may make a written submission which he shall serve on the Authority not less than 3 working days before the date fixed for the hearing of the case.

(4) Every hearing shall be held in public unless the Authority shall otherwise decide in relation to the whole or part of a particular case, but nothing in this regulation shall prevent a member of the Council on Tribunals or of its Scottish Committee from attending a hearing in his capacity as such.

(5) Where any person consulted by the Authority pursuant to regulation 21 has responded in writing and that person or a person acting on behalf of that person attends the hearing the Authority shall give him opportunity at the hearing to make observations on the evidence and arguments advanced by the parties to the case and by any persons heard by the Authority pursuant to regulation 25(2), and where any such observations are made the Authority shall give the parties to the case, and any person heard pursuant to regulation 25(2), opportunity at the hearing to respond to them.

(6) The failure of the Authority or of any person to give notice or publish any particulars in the time or manner provided for in the Act or in these Regulations or any other procedural irregularity shall not invalidate the action taken by the Authority; and the Authority may, and shall if it considers that any person may have been prejudiced, take such steps as it thinks fit before reaching its decision to cure the irregularity, whether by the giving of notice or otherwise.

(7) All the proceedings at a hearing of the Authority in connection with a case shall be recorded by a shorthand writer or by some other means, and if any person requests a record of the proceedings the Authority shall cause a mechanical recording or transcript of the shorthand or other record to be made available for purchase by that person at a reasonable price:

Provided that:

(a) the Authority shall not be required to make available a mechanical recording or transcript of the record of the proceedings at any time after the expiry of one year from the day of publication of its decision of the case; and

(b) a mechanical recording or transcript of the record of proceedings conducted otherwise than in public shall only be required to be made available for purchase by any party to the case or by any other person heard by the Authority at those proceedings.

(8) When the Authority provides to a person having a right of appeal pursuant to regulation 27(1) –

(a) notification in writing of its decision of the case, the notification shall specify a date, being not less than 3 working days after the date on which a copy of the notification was available for collection by or despatch to that person (which date is hereinafter referred to as 'the decision date');

(b) a mechanical recording or transcript of the record of proceedings in the case pursuant to a request made by that person within 7 days after the decision date, the recording or transcript shall be accompanied by a statement specifying a date, being not less than 3 working days after the date on which the recording or transcript was available for collection by or despatch to that person (which date is hereinafter referred to as 'the transcript date');

and the Authority shall as soon as may be thereafter publish the decision date and the transcript date.

Appeals to the Secretary of State

27 (1) Every party to a case before the Authority (not being a person having a right to be heard by virtue only of regulation 25(1)(e) or (f)) shall have a right of appeal to the Secretary of State in accordance with the provisions of this regulation from the Authority's decision with respect to an air transport licence or an application for a licence.

*

(2) An appeal to the Secretary of State shall be made by a notice signed by or on behalf of the appellant and clearly identifying the case to which it relates and stating the grounds on which the appeal is based and the arguments on which the appellant relies.

(3) The appellant shall serve the notice of appeal on:

(a) the Secretary of State;

(b) the Authority;

(c) each of the parties to the case before the Authority;

(d) each person whom, pursuant to regulation 25(2), the Authority had decided to exercise its discretion to hear in connection with the case, whether that person was heard or not; and

(e) any person consulted by the Authority, pursuant to regulation 21, in connection with the case.

(4) Subject to paragraph (9) of this regulation, the notice of appeal shall be served within 21 days after the decision date or, if the appellant has made such a request as is referred to in regulation 26(8) and has within 24 hours after making his request to the Authority served notice on each of the persons referred to in paragraph (3)(a), (c), (d) and (e) of this regulation that he has done so, not later than 21 days from the transcript date.

(5) Any person having the right to appeal against a decision of the Authority may require it to furnish him with the names and addresses of the persons of the description specified in paragraph (3)(c), (d) or (e) of this regulation.

(6) Subject to paragraph (9) of this regulation, any party to the appeal (other than the appellant) and any person who has been served with notice of the appeal pursuant to paragraph 3(e) of this regulation may within 14 days after service thereof serve on the Secretary of State a submission giving reasons why the Authority's decision should or should not be upheld and shall within such period serve copies of any such submission on the Authority, the appellant and the persons who have been served with notice of the appeal pursuant to paragraph (3)(c), (d) and (e) of this regulation.

(7) Subject to paragraph (9) of this regulation, within 28 days after receiving notice of an appeal, the Authority shall serve on the Secretary of State any submission it may wish to make in connection with the appeal, including, if it thinks fit, an amplification and explanation of the reasons for its decision, and shall, within such period, serve copies of any such submission on the appellant and on the persons who have been served with notice of the appeal pursuant to paragraph (3)(c), (d) and (e) of this regulation.

(8) Subject to paragraph (9) of this regulation, within 14 days after the expiry of the period of 28 days referred to in the preceding paragraph of this regulation, the appellant may serve on the Secretary of State a reply to any submission made pursuant to paragraph (6) or (7) of this regulation and shall within such period serve copies of any such reply

* Civil Aviation Act 2006

on the Authority and on the persons who have been served with notice of the appeal pursuant to paragraph (3)(c), (d) and (e) of this regulation.

* (9) (Deleted)

(10) Before deciding an appeal the Secretary of State may –

(a) ask the appellant, any other person who has made a submission pursuant to the preceding paragraphs of this regulation, or the Authority, to amplify or explain any point made by them or to answer any other question, the answer to which appears to the Secretary of State necessary to enable him to determine the appeal, and the Secretary of State shall as the case may be give the appellant, the other parties to the appeal and the Authority an opportunity of replying to such amplification, explanation or answer;

(b) obtain from the Authority any information which is in the possession of the Authority but which, pursuant to paragraph (ii) of the proviso to regulation 22 the Authority did not furnish to any person having the right to be heard by the Authority in connection with the case: the Secretary of State shall give the Authority and the person who provided the information to the Authority an opportunity of making written submissions in connection with any information so obtained: a copy of any submission of the Authority made pursuant to this subparagraph shall be served only on the person who provided the information to the Authority and a copy of any submission of that person or body made pursuant to this subparagraph shall be served only on the Authority.

(11) In the appeal proceedings no person may submit to the Secretary of State evidence which was not before the Authority when it decided the case.

Appeal from decisions after preliminary hearings of allegations of behaviour damaging to a competitor

28 (1) Regulation 27 shall apply in relation to appeals from decisions of the Authority after preliminary hearings of allegations of behaviour damaging to a competitor as it applies in relation to any other case but with the modifications herein set out.

(2) Those modifications are –

* SI 2007/3556

(a) in paragraph (1) the reference to every party shall be taken as a reference to the applicant and the respondent;

(b) in paragraph (3) the reference in subparagraph (c) to each of the parties shall be taken as a reference to the applicant or respondent, as the case may be, and the reference in subparagraph (d) to regulation 25(2) shall be taken as a reference to regulation 24(6);

(c) in paragraph (4) the first reference to 21 days shall be taken as a reference to 5 working days and the reference to the decision date shall be taken as a reference to the date upon which the Authority furnished reasons for its decision; and all the subsequent words in that paragraph (which relate to a request for a transcript and a time from the transcript date) shall be deleted;

(d) in paragraph (6) the reference to 14 days shall be taken as a reference to 5 working days;

(e) in paragraph (7) the reference to 28 days shall be taken as a reference to 8 working days;

(f) in paragraph (8) for 'within 14 days after the expiry of the period of 28 days' there shall be substituted 'within 4 working days after the expiry of the period of 8 working days'.

Decisions on appeals

29 (1) The Secretary of State may if he thinks fit uphold the decision of the Authority or direct it to re-hear the case which is the subject of the appeal or to reverse or vary its decision.

(2) The Secretary of State shall notify the Authority, the appellant and the persons who have been served with the notice of appeal pursuant to regulation 27(3) of his decision and of the reasons for it and the Authority shall publish the Secretary of State's notification.

(3) Where the Secretary of State directs the Authority to re-hear a case he shall at the same time notify the Authority and persons referred to in paragraph (2) of this regulation whether the Authority's decision is to have effect pending the further decision of the Authority.

(4) (a) Subject to paragraph (5) of this regulation, in determining an appeal the Secretary of State may, if he thinks fit, order the appellant to pay to any other party thereto either a specified sum in respect of the costs incurred by him in connection with the appeal, or the taxed amount of those costs or any part thereof;

(b) any costs required by an order under the foregoing subparagraph to be taxed may be taxed in the county court on such scale as may be directed by the order;

(c) any sum payable by virtue of an order under subparagraph (a) of this paragraph shall, if the county court so orders, be recoverable by execution issued from the county court or otherwise as if payable under an order of that court;

(d) the powers of the county court under the foregoing provisions of this paragraph may be exercised by the District Judge, or in Northern Ireland by the clerk of the Crown and Peace.

(5) (a) In determining an appeal where the appellant resides or has his registered or principal office in Scotland the Secretary of State may, if he thinks fit, order the appellant to pay to any other party thereto either a specified sum in respect of the

expenses incurred by him in connection with the appeal, or the taxed amount of those expenses or any part thereof;

(b) any expenses required by an order under the foregoing subparagraph to be taxed may be taxed by the Auditor of the Court of Session on such a scale as may be directed by the order;

(c) any award of expenses by the Secretary of State under the foregoing provisions of this paragraph may be enforced in like manner as a recorded decree arbitral.

(6) An appeal to the Secretary of State shall not preclude him from consulting the competent authorities of any country or territory outside the United Kingdom for the purposes of section 6(2)(a) to (d) of the Act (which relates to national security, relations with other countries and territories and similar matters) notwithstanding that the consultation may relate to matters affecting the appeal.

(7) The failure of any person (other than the appellant in serving notice of appeal on the Secretary of State within the time prescribed in regulation 27(4)) to serve any notice, submission or reply, or copies thereof or to furnish any particulars in the time or manner provided for in the Act or in these Regulations or any other procedural irregularity shall not invalidate the decision of the Secretary of State; and the Secretary of State may, and shall if he considers that any person may have been prejudiced, take such steps as he thinks fit before deciding the appeal to cure the irregularity.

Transfer of licences

30 (1) Subject to the provisions of this regulation:

* (a) if the sole holder of an air transport licence or a route licence (being an individual) shall die, the licence shall be treated from the time of his death as if it had then been granted to his legal personal representative;

(b) if in connection with the reconstruction of any body corporate or the amalgamation of any bodies corporate the whole of the business of the holder of a licence (being a body corporate), or such part thereof as includes the provision of carriage by air for reward of passengers or cargo, is transferred or sold to another body corporate, the licence shall be treated, from the date of the transfer or sale of the whole or the relevant part of the business, as if it had been granted to that other body corporate.

(2) The person required by paragraph (1) of this regulation to be treated as the holder of the licence may apply to the Authority:

(a) if he is the legal personal representative of an individual licence holder who has died, for the transfer of the licence to any person entitled to a beneficial interest in the deceased's estate (including himself in his personal capacity if he is in that capacity entitled to such an interest); and

(b) in any other case, for the substitution of his own name in the licence for the name of the person by whom the licence was held.

(3) The application shall state the grounds on which it is based and shall be served on the Authority within 21 days after the date on which the applicant first became entitled to make it; and if no application as aforesaid is made within that period the licence shall cease at the expiration of that period to be treated as if granted to a person other than the person to whom it was granted.

* SI 1992/2992

(4) The application shall, for the purposes of these Regulations be treated as if it were an application for the variation of the licence, and the provisions of regulations 27 and 29 as to appeals shall apply accordingly.

(5) The Authority shall not grant an application for the transfer of a licence to, or the substitution of the name of, any person if

* (a) in the case of an air transport licence it would be bound under section 65(2) of the Act, and

(b) in the case of an air transport licence or a route licence it would be bound under section 65(3) or 69A(4) of the Act,

to refuse that application if it were an application for the grant of a licence to that person.

(6) For the purposes of this regulation 'legal personal representative' means a person constituted executor, administrator or other representative of a deceased person by probate, administration or other instrument.

Surrender of licences

* **31** If revocation or variation of an air transport licence or a route licence has taken effect, the Authority may require any person who has the licence in his possession or control to surrender it for cancellation or variation, as the case may be and any person who fails, without reasonable cause, to comply with any such requirement, shall be guilty of an offence and shall be liable on summary conviction to a fine not exceeding level 2 on the standard scale.

** **PART IIIA REFERENCES IN RESPECT OF AN AIR TRAFFIC SERVICES LICENCE**

Determination by the Authority

32 (1) Where, pursuant to a condition of an air traffic services licence, any matter or question may be referred for determination by one or more Members of the Authority pursuant to these Regulations and such a matter or question is referred, it shall be determined in accordance with the provisions of this Part of these Regulations.

(2) The function of the Authority under section 7(5) of the Transport Act 2000 with respect to the modification of a licence, to the extent it gives rise to a matter or question referred for determination by one or more members of the Authority, is hereby prescribed for the purpose of section 7(2) of the Act.

(3) For the purpose of making any determination in such a case a quorum of the Authority shall be two Members.

(4) The Authority shall sit with such technical assessors to advise it as the Authority may appoint, but the Authority shall not appoint as an assessor any person who participated in the development of any notice or counter-notice in relation to the matter or question to be determined.

(5) For the purposes of this Part of these Regulations:

(a) "an air traffic services licence" means a licence granted pursuant to Section 6 of the Transport Act 2000;

(b) where the Authority is required to publish any information it may do so electronically or otherwise;

* (c) where the Authority is required to make any information available at its principal office for inspection it may do so electronically or otherwise;

* SI 1992/2992
** SI 2001/2448

(d) anything which is required to be served on the Authority may be served electronically by sending it to an e-mail address which it has published for the purpose or in accordance with regulation 4.

Representations

33 (1) The Authority shall within one calendar month after a reference has been made serve notice of the reference on the licence holder and publish such particulars of the reference as it thinks necessary for indicating the substance of the reference, and shall make a copy of the reference available at its principal office for inspection by any person at any reasonable time.

(2) The licence holder or any other person may serve on the Authority a representation about a reference if he does so within 21 days of, in the case of the licence holder the date of service of notice or, in the case of any other person, publication of the reference by the Authority.

(3) The Authority shall make a copy of any representation which has been served on the Authority available at its principal office for inspection by any person at any reasonable time and shall serve a copy of any representations received from persons other than the licence holder on the licence holder.

Hearings in connection with licences

34 (1) Where a matter or question referred to in regulation 31A(1) has been referred the Authority shall, before making a determination:

(a) consider any representations which may have been served on it by the licence holder or any other person within the time permitted by regulation 31B(2);

(b) consider any written submissions served pursuant to regulation 31D(3); and

(c) conduct a hearing in accordance with regulation 31D and consider any representations made and evidence submitted at such a hearing.

(2) The following persons shall have a right to be heard at the hearing held pursuant to paragraph (1)(c):

(a) the licence holder; and

(b) such persons (being persons who wish to be heard and who have served representations within the time permitted by regulation 31B(2)) as appear to the Authority to be users of services provided by the licence holder or to be representative of such persons.

(3) Notwithstanding that a person does not have the right to be heard, the Authority may, if it thinks fit, hear him.

(4) No hearing shall be held pursuant to this regulation unless the Authority has served on the licence holder and any other person whom it proposes to hear in connection with the case not less than 14 days' notice of the date, time and place of the hearing, and the notice shall clearly identify the reference to which it relates: a similar notice shall be published not less than 7 days before the date of the hearing, and shall be exhibited in a public place in the Authority's principal office during the 7 days immediately preceding the date of the hearing.

* **Procedure at hearings**

35 (1) Hearings shall be conducted by the Authority.

* SI 2001/2448

(2) At a hearing any person entitled to be heard may appear in person or be represented by any other person whom he may have authorised to represent him, and may produce oral and written evidence and may examine any other person whom the Authority hears pursuant to regulation 31C and any witnesses produced by any such person.

(3) Any person who has served a representation within the time permitted by regulation 31B(2) but who does not wish to be heard, may make a written submission which he shall serve on the Authority not less than 3 working days before the date fixed for the hearing of the case.

(4) (a) Where an oral hearing is held it shall be held in public unless, having regard to the subject matter of the hearing and any representations from the licence holder the Authority directs that the hearing or any part of the hearing shall take place in private.

(b) Nothing in this regulation shall prevent a member of the Council on Tribunals or of its Scottish Committee from attending a hearing in his capacity as such.

(5) The failure of the Authority or of any person to give notice or publish any particulars in the time or manner provided for in the Act or in these Regulations or any other procedural irregularity shall not invalidate the action taken by the Authority; and the Authority may, and shall if it considers that any person may have been prejudiced, take such steps as it thinks fit before reaching its determination to cure the irregularity, whether by the giving of notice or otherwise.

(6) (a) Subject to sub-paragraph (b) all the proceedings at a hearing of the Authority in connection with a case shall be recorded by a shorthand writer or by some other means, and if any person requests a record of the proceedings the Authority shall cause a mechanical recording or transcript of the shorthand or other record to be made available for purchase by that person at a reasonable price.

(b) (i) The Authority shall not be required to make available a mechanical recording or transcript of the record of the proceedings at any time after the expiry of one year from the day of publication of its determination of the case.

(ii) A mechanical recording or transcript of the record of proceedings conducted otherwise than in public shall only be required to be made available for purchase by any person heard by the Authority at those proceedings.

Determination by Authority and Appeal to the Secretary of State

36 (1) Where the Authority makes a determination pursuant to this Part of these Regulations the Authority shall serve a notice of its determination and a statement of its reasons for the determination on the licence holder.

(2) (a) Where the relevant condition of an air traffic services licence provides in respect of a matter or question that the decision of the Authority shall be definitive there shall be no appeal to the Secretary of State.

(b) Where the relevant condition of an air traffic services licence provides in respect of a matter or question that the licence holder may appeal to the Secretary of State, he may do so in accordance with this regulation.

* (3) (a) An appeal to the Secretary of State shall be made by a notice signed by or on behalf of the licence holder and clearly identifying the matter or question to which it relates and stating the grounds on which the appeal is based and the arguments on which the licence holder relies.

* SI 2001/2448

(b) The licence holder shall serve the notice on the Secretary of State and a copy on the Authority within 14 days of receipt by the licence holder of the notice of determination and statement of reasons pursuant to paragraph (1).

(4) The Authority shall within one calendar month after receiving notice of appeal publish such particulars of the appeal as it thinks necessary to indicate the substance of the appeal.

(5) Within 14 days after receiving notice of an appeal, the Authority shall serve on the Secretary of State any submission it may wish to make in connection with the appeal including, if it thinks fit, an amplification and explanation of the reasons for its determination, and shall, within such period, serve a copy of any such submission on the licence holder.

(6) Within 14 days after publication of the notice of the appeal by the Authority any person who appeared at the hearing before the Authority may serve on the Secretary of State a submission giving reasons why the Authority's determination should or should not be upheld and shall within such period serve copies of any such submission on the Authority and the licence holder.

(7) Within 14 days after receipt of any submission made pursuant to the preceding two paragraphs the licence holder may serve on the Secretary of State a reply and shall within such period serve a copy of any such reply on the Authority.

(8) Before deciding an appeal the Secretary of State may ask the licence holder, the Authority or any other person who appeared at the hearing held by the Authority to amplify or explain any point made by them or to answer any other question, the answer to which appears to the Secretary of State necessary to enable him to determine the appeal, and the Secretary of State shall as the case may be give the licence holder, the Authority and any other person who appeared at the hearing held by the Authority an opportunity of replying to such amplification, explanation or answer.

(9) (a) Where any person is obliged to serve on the Authority any notice, representation, submission or other material pursuant to this regulation the Authority shall as soon as may be after receipt thereof make a copy available at its principal office for inspection by any person at any reasonable time.

(b) The Authority shall also make a copy of any representation, submission or other material which it is obliged to serve on the licence holder or the Secretary of State pursuant to this regulation available at its principal office for inspection by any person at any reasonable time.

(10) In the appeal proceedings none of the Authority, the licence holder or any other person may submit to the Secretary of State evidence which was not before the Authority when it decided the case.

Decision by Secretary of State on appeal

37 (1) The Secretary of State may if he thinks fit uphold the determination of the Authority in whole or in part or reverse or vary the whole or any part of its determination.

* (2) The Secretary of State shall notify the Authority and the licence holder of his decision and of the reasons for it and the Authority shall publish the Secretary of State's notification.

(3) The failure of any person (other than the licence holder in serving notice of appeal on the Secretary of State within the time prescribed in regulation 31E(3)(b)) to serve any notice, representation, submission or reply, or copies thereof or to furnish any particulars

* SI 2001/2448

in the time or manner provided for in the Act or in these Regulations or any other procedural irregularity shall not invalidate the decision of the Secretary of State; and the Secretary of State may, and shall if he considers that any person may have been prejudiced, take such steps as he thinks fit before deciding the appeal to cure the irregularity.

* SI 2001/2448

PART IV OTHER FUNCTIONS OF THE AUTHORITY

Participation in civil proceedings

38 (1) The function of the Authority of being a party to civil proceedings is hereby prescribed for the purposes of section 7(2) of the Act.

(2) In any civil proceedings to which the Authority is or becomes a party, the Authority shall disclose to the Court and any other party to the proceedings information in its possession which, apart from section 23(1) of the Act, it would have been under a duty to disclose for the purpose of those proceedings.

SCHEDULE

REVOCATION	Regulation 2
(1) **Regulations revoked**	**(2)** **References**
The Civil Aviation Authority Regulations 1983	1983/550
The Civil Aviation Authority (Amendment) Regulations 1987	1987/379
The Civil Aviation Authority (Amendment) Regulations 1989	1989/1826
The Civil Aviation Authority (Amendment) Regulations 1990	1990/9

TABLE OF COMPARISON

The following Table shows, in relation to each regulation of the Civil Aviation Authority Regulations 1983, as amended, the regulations of the 1991 Regulations in which it is reproduced.

1983 Regulations as amended	1991 Regulations
1	1
2	2
3	3
4	4
5	5
6	6
7	7
8	8
9	9
9A	10
9B	11
9C	12
9D	13
9E	14
10	15
11	16
12	17
13	18
14	19
15	20
16	21
17	22
18	23
18A	24
19	25
20	26
21	27
21A	28
22	29
23	30
24	31
25	32

INTENTIONALLY LEFT BLANK

SECTION 7 THE AIR NAVIGATION (DANGEROUS GOODS) REGULATIONS 2002

Made 11th November 2002

Coming into force 2nd December 2002

ARRANGEMENT OF REGULATIONS

PART I PRELIMINARY

1 Citation and commencement
2 Revocation
3 Interpretation

PART II REQUIREMENTS FOR CARRIAGE OF DANGEROUS GOODS

4 Requirement for approval of operator
5 Prohibition of carriage of dangerous goods

PART III OPERATOR'S OBLIGATIONS

6 Provision of information by the operator to crew etc
7 Acceptance of dangerous goods by the operator
8 Method of loading by the operator
9 Inspections by the operator for damage, leakage or contamination
10 Removal of contamination by the operator

PART IV SHIPPER'S RESPONSIBILITIES

11 Shipper's responsibilities

PART V COMMANDER'S OBLIGATIONS

12 Commander's duty to inform air traffic services

PART VI TRAINING

13 Provision of training

PART VII PROVISION OF INFORMATION TO PASSENGERS AND IN RESPECT OF CARGO

14 Provision of information to passengers
15 Provision of information in respect of cargo

PART VIII DOCUMENTS AND RECORDS, ENFORCEMENT POWERS AND GENERAL

16 Keeping of documents and records

17 Production of documents and records

18 Powers in relation to enforcement of the Regulations

19 Occurrence reporting

20 Dropping articles for agricultural, horticultural, forestry or pollution control purposes

21 Police aircraft

SCHEDULE

Schedule Regulations Revoked

The Secretary of State for Transport, in exercise of the powers conferred by articles 60(1) and 129(5) of the Air Navigation Order 2000[(a)] and of all other powers enabling him in that behalf, hereby makes the following Regulations:

(a) S.I. 2000/1562, to which there are amendments not relevant to these Regulations.

PART I PRELIMINARY

Citation and commencement

1 These Regulations may be cited as the Air Navigation (Dangerous Goods) Regulations 2002 and shall come into force on 2nd December 2002.

Revocation

2 The Regulations specified in the Schedule hereto are hereby revoked.

Interpretation

3 (1) In these Regulations:

'acceptance check list' means a document used to assist in carrying out a check on the external appearance of packages of dangerous goods and their associated documents to determine that all appropriate requirements have been met;

'cargo aircraft' means any aircraft which is carrying goods or property but not passengers and for the purposes of these Regulations the following are not considered to be passengers:

(a) a crew member;

(b) an operator's employee permitted to be carried by, and carried in accordance with, the instructions contained in the Operations Manual;

(c) an authorised representative of a competent national aviation authority;

(d) a person with duties in respect of a particular shipment on board;

'dangerous goods' means any article or substance which is identified as such in the Technical Instructions;

'dangerous goods accident' means an occurrence associated with and related to the carriage of dangerous goods by air which results in fatal or serious injury to a person or major property damage;

'dangerous goods incident' means an occurrence, other than a dangerous goods accident, which:

(a) is associated with and related to the carriage of dangerous goods by air, not necessarily occurring on board an aircraft, which results in injury to a person, property damage, fire, breakage, spillage, leakage of fluid or radiation or other evidence that the integrity of the packaging has not been maintained; or

(b) relates to the carriage of dangerous goods and which seriously jeopardises the aircraft or its occupants;

'dangerous goods transport document' means a document which is specified by the Technical Instructions and contains information about those dangerous goods;

'freight container' means an article of transport equipment for radioactive materials, designed to facilitate the carriage of such materials, either packaged or unpackaged, by one or more modes of transport, but does not include a unit load device;

'handling agent' means an agent who performs on behalf of the operator some or all of the functions of the latter including receiving, loading, unloading, transferring or other processing of passengers or cargo;

'ID number' means an identification number specified in the Technical Instructions for an item of dangerous goods which has not been assigned a UN number;

'non-United Kingdom operator' means an aircraft operator who holds an air operator's certificate issued otherwise than by the CAA;

'overpack' means an enclosure used by a single shipper to contain one or more packages and to form one handling unit for convenience of handling and stowage, but does not include a unit load device;

'package' means the complete product of the packing operation consisting of the packaging and its contents prepared for carriage;

'packaging' means the receptacles and any other components or materials necessary for the receptacle to perform its containment function;

'proper shipping name' means the name to be used to describe a particular article or substance in all shipping documents and notifications and, where appropriate, on packagings;

'serious injury' means an injury which is sustained by a person in an accident and which:

(a) requires hospitalisation for more than 48 hours, commencing within seven days from the date the injury was received; or

(b) results in a fracture of any bone (except simple fractures of fingers, toes or nose); or

(c) involves lacerations which cause severe haemorrhage, nerve, muscle or tendon damage; or

(d) involves injury to any internal organ; or

(e) involves second or third degree burns, or any burns affecting more than 5 per cent of the body surface; or

(f) involves verified exposure to infectious substances or injurious radiation;

* 'Technical Instructions' means the 2013-2014 English language edition of the Technical Instructions for the Safe Transport of Dangerous Goods by Air, approved and published by decision of the Council of the International Civil Aviation Organisation;

'UN number' means the four-digit number assigned by the United Nations Committee of Experts on the Transport of Dangerous Goods to identify a substance or a particular group of substances;

'unit load device' means any type of container or pallet designed for loading onto an aircraft but does not include a freight container for radioactive materials or an overpack; and

'United Kingdom operator' means an aircraft operator who holds an air operator's certificate issued by the CAA.

(2) (a) Other expressions used in these Regulations shall have the same respective meanings as in the Air Navigation Order 2000.

(3) For the avoidance of doubt any reference in the Technical Instructions or these Regulations to the taking on board, loading onto or carriage of dangerous goods in or on an aircraft shall for the purpose of these Regulations be interpreted as applying also to the placing, suspending or carriage of such goods beneath an aircraft unless the context makes it otherwise apparent.

* S.I. 2012/3054

PART II REQUIREMENTS FOR CARRIAGE OF DANGEROUS GOODS

Requirement for approval of operator

4 (1) An aircraft shall not carry or have loaded onto it any dangerous goods unless;

(a) the operator is approved under this regulation; and

(b) such goods are carried or loaded in accordance with:

(i) any conditions to which such approval may be subject; and

(ii) in accordance with the Technical Instructions.

(2) An approval under this regulation:

(a) shall be granted by the CAA if it is satisfied the operator is competent to carry dangerous goods safely;

(b) shall be in writing; and

(c) may be subject to such conditions as the CAA thinks fit.

Prohibition of carriage of dangerous goods

5 (1) Subject to paragraphs (2) and (3) a person shall not:

(a) deliver or cause to be delivered for carriage in, or

(b) take or cause to be taken on board;

an aircraft any dangerous goods, which he knows or ought to know or suspect to be goods capable of posing a risk to health, safety, property or the environment when carried by air, unless the Technical Instructions have been complied with and the package of those goods is in a fit condition for carriage by air.

(2) Subject to paragraph (3), these Regulations shall not apply to those dangerous goods specified in the Technical Instructions as being:

(a) for the proper navigation or safety of flight;

(b) to provide, during flight, medical aid to a patient;

(c) to provide, during flight, veterinary aid or a humane killer for an animal;

(d) to provide, during flight, aid in connection with search and rescue operations;

(e) permitted for carriage by passengers or crew members; or

(f) intended for use or sale during the flight in question.

(3) (a) The goods specified in paragraph (2) shall only be carried provided they comply with the following sub-paragraphs and Part 8 and the applicable provisions in paragraphs 1.1.3 and 2.2 of Part 1 of the Technical Instructions.

(b) The goods specified in sub-paragraph (2)(a) shall only be carried if:

(i) they are required to be carried on an aircraft by or under the Air Navigation Order 2000 or are otherwise intended for use on an aircraft for the purpose of the good order of the flight in accordance with the normal practice whether or not, in either case, such goods are required to be carried or intended to be used on that particular flight;

(ii) when they are intended as replacements or have been removed for replacement, they comply with paragraph 2.2.2 of Part 1 of the Technical Instructions;

(c) The goods specified in sub-paragraph (2)(b) and (2)(c) shall only be carried if:

(i) they are or may be required for use during the flight;

(ii) they are or may be required for use during a subsequent flight by the same aircraft and it will not be practicable to load the goods onto the aircraft in the intervening period before the commencement of that subsequent flight; or

(iii) they were used or might have been required for use during a previous flight by the same aircraft and it has not been practicable to unload them from the aircraft since that flight;

(d) The goods specified in sub-paragraph (2)(e) shall only be carried by passengers or crew members if they comply with the provisions in Part 8 of the Technical Instructions;

(e) The goods specified in sub-paragraph (2)(f) shall only be carried if the Technical Instructions identify them as being items which can be carried on an aircraft for sale or use during a flight or, when they are intended as replacements for such items or have been removed for replacement, they are carried in accordance with paragraph 2.2.3 of Part 1 of the Technical Instructions.

PART III OPERATOR'S OBLIGATIONS

Provision of information by the operator to crew etc.

6 (1) (a) The operator of an aircraft flying for the purposes of public transport shall ensure that all appropriate manuals, including the Operations Manual, contain information about dangerous goods so that ground staff and crew members can carry out their responsibilities in regard to the carriage of dangerous goods, including the actions to be taken in the event of emergencies involving dangerous goods.

(b) Where applicable, the operator shall ensure such information is also provided to his handling agent.

(2) The operator of an aircraft in which dangerous goods are to be carried as cargo shall ensure that, before the flight begins, the commander of the aircraft is provided with:

(a) written information about the dangerous goods as specified in paragraph 4.1 of Part 7 of the Technical Instructions; and

(b) information for use in responding to an in-flight emergency as specified in paragraph 4.8 of Part 7 of the Technical Instructions.

(3) The operator of an aircraft which is involved in an aircraft accident or an aircraft incident in the United Kingdom shall notify the CAA without delay of any dangerous goods carried as cargo on the aircraft.

Acceptance of dangerous goods by the operator

7 (1) The operator of an aircraft in which dangerous goods are to be carried shall ensure that no package, overpack or freight container which contains dangerous goods is accepted for carriage in an aircraft until such package, overpack or freight container has been inspected to determine that:

(a) insofar as it is reasonable to ascertain, the goods are not forbidden for carriage by air in any circumstances by the provisions of the Technical Instructions;

(b) insofar as it is reasonable to ascertain, the goods are classified as required by the Technical Instructions;

(c) insofar as it is reasonable to ascertain, the goods are packed as required by the Technical Instructions;

(d) the package, overpack or freight container is marked and labelled in accordance with the provisions of Chapters 2 and 3 of Part 5 of the Technical Instructions;

(e) the package, overpack or freight container is not leaking or damaged so that the contents may escape.

(2) The operator of an aircraft in which dangerous goods are to be carried shall ensure that no package, overpack or freight container which contains dangerous goods is accepted for carriage in that aircraft unless it is accompanied by a dangerous goods transport document, except where the Technical Instructions indicate that such a document is not required, and shall inspect such a document to determine that it complies with the provisions of the Technical Instructions.

(3) (a) For the purpose of each of the inspections required by paragraphs (1) and (2) an acceptance check list shall be used and the results of the inspection shall be recorded thereon.

(b) The acceptance check list shall be in such form and shall provide for the entry of such details as will enable the relevant inspection to be fully and accurately made by reference to the completion of that list.

Method of loading by the operator

8 (1) The operator of an aircraft in which dangerous goods are to be carried as cargo shall ensure that dangerous goods are not carried in any compartment occupied by passengers or on the flight deck, except in circumstances permitted by the provisions in paragraph 2.1 of Part 7 of the Technical Instructions.

(2) The operator of an aircraft in which dangerous goods are to be carried shall ensure that any package, overpack or freight container which contains dangerous goods is loaded, segregated, stowed and secured on an aircraft in accordance with the provisions in Chapter 2 of Part 7 of the Technical Instructions.

(3) The operator of an aircraft in which dangerous goods are to be carried shall ensure that packages, overpacks or freight containers bearing an indication that they can only be carried on a cargo aircraft are loaded and stowed in accordance with the provisions in paragraph 2.4.1 of Part 7 of the Technical Instructions and are not loaded on an aircraft carrying passengers.

Inspections by the operator for damage, leakage or contamination

9 (1) The operator of an aircraft in which dangerous goods are to be carried shall ensure packages, overpacks or freight containers which contain dangerous goods are inspected for evidence of damage or leakage before being loaded on an aircraft or placed in a unit load device.

(2) The operator of an aircraft in which dangerous goods are to be carried shall ensure a unit load device containing dangerous goods is not loaded unless it has been inspected and found free from any evidence of leakage from or damage to the packages, overpacks or freight containers contained in it.

(3) The operator of an aircraft in which dangerous goods are to be carried shall ensure that any package, overpack or freight container which contains dangerous goods which appears to be leaking or damaged is not loaded on an aircraft.

(4) The operator of an aircraft in which dangerous goods are to be carried shall ensure that any package, overpack or freight container which contains dangerous goods which is found to be leaking or damaged on an aircraft is removed and that other cargo or baggage loaded on that aircraft is in a fit state for carriage by air and has not been contaminated.

(5) The operator of an aircraft in which dangerous goods have been carried shall ensure after unloading that all packages, overpacks or freight containers which contain dangerous goods are inspected for signs of damage or leakage and if there is such evidence shall ensure that any part of the aircraft where the package, overpack or freight container was stowed, or any sling or other apparatus which has been used to suspend goods beneath the aircraft is inspected for damage or contamination.

Removal of contamination by the operator

10 (1) The operator of an aircraft in which dangerous goods are to be carried shall ensure that any contamination found as a result of leaking or damaged packages, overpacks or freight containers is removed without delay.

(2) The operator of an aircraft shall ensure that an aircraft is not permitted to fly for the purpose of carrying passengers or cargo if it is known or suspected that radioactive materials have leaked in or contaminated the aircraft, unless the radiation level resulting from the fixed contamination at any accessible surface and the non-fixed contamination are not more than the values specified in paragraph 3.2 of Part 7 of the Technical Instructions.

PART IV SHIPPER'S RESPONSIBILITIES

Shipper's responsibilities

11 Before consigning any dangerous goods for carriage by air the shipper shall ensure that:

(a) the goods are not forbidden for carriage by air in any circumstances under the provisions in paragraph 2.1 of Part 1 of the Technical Instructions;

(b) if the goods are forbidden for carriage by air without approval, all such approvals have been obtained where the Technical Instructions indicate it is the responsibility of the shipper to so obtain them;

(c) the goods are classified according to the classification criteria contained in Part 2 of the Technical Instructions;

(d) the goods are packed according to paragraphs 2.2 and 2.4 of Part 1, Part 2, chapters 2 and 3 and paragraphs 4.2, 4.3 and 4.4 of Part 3 and Part 4 of the Technical Instructions and the packagings used are in accordance with such provisions of those paragraphs, chapters and Parts and Part 6 of the Technical Instructions as apply to those goods;

(e) the package is marked and labelled in English in addition to any other language required by the State of Origin as specified for those goods in paragraph 2.4 of Part 1, chapters 2 and 3 and paragraph 4.5 of Part 3, chapters 2 and 3 of Part 5 and chapter 2 of Part 6 of the Technical Instructions;

(f) the package is in a fit condition for carriage by air;

(g) when one or more packages are placed in an overpack, the overpack only contains packages of goods permitted to be carried by paragraph 1.1 of Part 5 of the Technical Instructions and the overpack is marked and labelled as required by paragraphs 2.4 and 3.2 of Part 5 of the Technical Instructions;

(h) a dangerous goods transport document:

(i) has been completed in English in addition to any other language required by the State of Origin as required by paragraph 4.1 of Part 5 of the Technical Instructions; and

(ii) contains a declaration signed by or on behalf of the shipper stating that the Technical Instructions have been complied with in that the dangerous goods:

(iia) are fully and accurately described;

(iib) are correctly classified, packed, marked and labelled; and

(iic) are in a proper condition for carriage by air;

(i) the operator of the aircraft has been furnished with the dangerous goods transport document required by paragraph (h) and such other documents in respect of dangerous goods as are required by Part 4 and paragraphs 4.3 and 4.4 of Part 5 of the Technical Instructions.

PART V COMMANDER'S OBLIGATIONS

Commander's duty to inform air traffic services

12 The commander of an aircraft carrying dangerous goods as cargo shall, in the event of an inflight emergency and as soon as the situation permits, inform the appropriate air traffic services unit of those dangerous goods in detail or as a summary or by reference to the location from where the detailed information can be obtained immediately.

PART VI TRAINING

Provision of training

13 (1) The shipper, and any agent thereof, shall ensure that before a consignment of dangerous goods is offered by him for carriage by air all persons involved in its preparation have received training as specified in Chapter 4 of Part 1 and paragraph 1.5 of Part 5 of the Technical Instructions, to enable them to carry out their responsibilities with regard to the carriage of dangerous goods by air.

(2) (a) A United Kingdom operator, and any agent thereof, shall ensure that all relevant staff involved with the carriage of passengers or cargo by air have received training which complies with sub-paragraphs (c) and (d).

(b) The operator of an aircraft shall ensure that the staff of his handling agent have received that training.

(c) The training shall be as specified in Chapter 4 of Part 1 and paragraph 4.9 of Part 7 of the Technical Instructions.

(d) The training has been granted a training approval under paragraph (8).

(3) (a) The agent for a non-United Kingdom operator shall ensure that all relevant staff involved with the carriage of passengers or cargo by air have received training which complies with sub-paragraphs (b) and (c).

(b) The training shall be as specified in Chapter 4 of Part 1 and paragraph 4.9 of Part 7 of the Technical Instructions.

(c) The training has been granted a training approval under paragraph (8).

(4) The content of training programmes shall be as specified in Chapter 4 of Part 1 of the Technical Instructions.

(5) Initial and recurrent training programmes shall be established and maintained by or on behalf of the shipper and any agent thereof, the operator of an aircraft if it is a United Kingdom operator and the agent of the operator whether the operator is a United Kingdom operator or a non-United Kingdom operator in accordance with paragraph 4.1 of Part 1 of the Technical Instructions and recurrent training shall take place not less than every two years.

(6) Records of training shall be maintained as specified in paragraph 4.2 of Part 1 of the Technical Instructions.

(7) No person shall offer or provide training required by this part of these Regulations unless:

(c) he (i) has been granted a training instructor approval under paragraph (9); and

(iii) the training has been approved under paragraph (8); or

(d) he is employed by a shipper or an agent thereof and the training is offered or provided to other employees of that shipper or agent; or

(d) he (ii) is employed by a United Kingdom operator or by an agent of a United Kingdom operator or of a non-United Kingdom operator;

(iv) the training has been approved under paragraph (8); and

(v) the training is offered or provided to other employees of that United Kingdom aircraft operator or agent.

(8) A training approval under this regulation shall be:

(a) granted by the CAA if it is satisfied that the form and content of the training is adequate for its purpose;

(b) in writing; and

(c) subject to such conditions as the CAA thinks fit, and may in particular include a condition requiring that the training be provided by a person who holds a training instructor approval granted by the CAA under paragraph (9).

(9) A training instructor approval under this regulation shall be:

(a) granted by the CAA if it is satisfied that the person is competent to carry out the training specified in the approval granted under paragraph (8);

(b) in writing; and

(c) subject to such conditions as the CAA thinks fit.

PART VII PROVISION OF INFORMATION TO PASSENGERS AND IN RESPECT OF CARGO

Provision of information to passengers

14 (1) An airport operator and the operator of an aircraft flying for the purpose of public transport of passengers or his agent shall ensure that persons who are or may become passengers on an aircraft flying for the purposes of public transport are warned as to the types of dangerous goods which they are forbidden from carrying on an aircraft as checked baggage or with them by displaying notices sufficient in number and prominence for this purpose:

(a) at each of the places at an airport where tickets are issued;

(b) at each of the areas at an airport maintained to assemble passengers to board an aircraft; and

(c) at any location where a passenger may be checked in.

(2) The operator of an aircraft flying for the purpose of the public transport of passengers or his agent shall ensure that passengers are warned as to the type of dangerous goods which they are forbidden from carrying on an aircraft as checked baggage or with them either by providing information with each passenger ticket, sufficient in prominence for this purpose, or by some other appropriate means such that passengers receive a warning in addition to that required by paragraph (1).

(3) Any person who, in the United Kingdom, makes available flight accommodation shall ensure that persons who are or may become passengers on an aircraft flying for the purposes of public transport are warned as to the types of dangerous goods which they are forbidden from carrying on an aircraft as checked baggage or with them by displaying notices sufficient in number and prominence for this purpose at any place where flight accommodation is offered for sale.

Provision of information in respect of cargo

15 The operator of an aircraft in which cargo is to be carried and any agent thereof shall ensure that notices giving information about the carriage of dangerous goods are displayed in sufficient number and prominence for this purpose at those places where cargo is accepted for carriage.

PART VIII DOCUMENTS AND RECORDS, ENFORCEMENT POWERS AND GENERAL

Keeping of documents and records

16 (1) The operator of an aircraft carrying dangerous goods as cargo shall ensure that a copy of the dangerous goods transport document required by regulation 7(2) and the written information to the commander required by regulation 6(2)(a) are retained at a readily accessible location until after the full period of the flight on which the goods were carried.

(2) The operator of an aircraft in which dangerous goods are carried shall preserve for not less than three months:

(a) any dangerous goods transport document or other document in respect of dangerous goods which has been furnished to him by the shipper in accordance with regulation 7(2);

(b) the record of any acceptance check list completed in accordance with regulation 7(3); and

(c) the written information to the commander as required by regulation 6(2)(a).

(3) The record referred to in paragraph (2)(b) may be in a legible or a non-legible form so long as the recording is capable of being reproduced in a legible form.

Production of documents and records

17 (1) The operator of an aircraft on which dangerous goods are to be or have been carried and any agent thereof shall, within a reasonable time after being requested so to do by an authorised person, cause to be produced to that person such of the following documents as may have been requested by that person:

(a) the written approval referred to in regulation 4(1);

(b) the dangerous goods transport document or other document in respect of any dangerous goods, referred to in regulation 7(2);

(c) the completed acceptance check list in a legible form in respect of any dangerous goods, referred to in regulation 7(3); and

(d) a copy of the written information provided to the commander of the aircraft in respect of any dangerous goods, referred to in regulation 6(2)(a).

(2) The aircraft operator, shipper and any agent of either of them shall, within a reasonable time after being requested so to do by an authorised person, cause to be produced to that person any document which relates to goods which the authorised person has reasonable grounds to suspect may be dangerous goods in respect of which the provisions of these Regulations have not been complied with.

Powers in relation to enforcement of the Regulations

18 (1) An authorised person may examine, take samples of and seize any goods which the authorised person has reasonable grounds to suspect may be dangerous goods in respect of which the provisions of these Regulations have not been complied with.

(2) An authorised person may open or require to be opened any baggage or package which the authorised person has reasonable grounds to suspect may contain dangerous goods in respect of which the provisions of these Regulations have not been complied with.

(3) (a) Subject to paragraph (5), any sample taken or goods seized by an authorised person under this regulation shall be retained or detained respectively for so long as the CAA considers necessary in all the circumstances and shall be disposed of in such manner as the CAA considers appropriate in all the circumstances.

(b) Without prejudice to the generality of sub-paragraph (a) any sample taken or goods seized under this regulation may be retained or detained respectively:

(i) for use as evidence at a trial for an offence; or

(ii) for forensic examination or for investigation in connection with an offence.

(4) (a) The person from whom any goods have been seized by an authorised person under this regulation may apply to the CAA for the item to be released to him.

(b) An application under this paragraph shall be made in writing and shall be accompanied by evidence of ownership by the applicant.

(c) The function of deciding a case where such an application as is referred to in sub-paragraph (a) has been made is hereby prescribed for the purposes of section 7(1) of the Civil Aviation Act 1982: and for the purpose of making any decision in such a case a quorum of the CAA shall be one member.

(d) Where the CAA is satisfied that the applicant is the owner of the item concerned and that further retention of the item is not necessary for the purposes of any criminal proceedings it shall arrange for the goods concerned to be returned to the applicant.

(5) Where further retention of goods is, in the opinion of the CAA no longer necessary and no application has been made under paragraph (4) or any such application has been unsuccessful the goods shall be destroyed or otherwise disposed of in accordance with the directions of the CAA.

Occurrence reporting

19 (1) A United Kingdom operator shall ensure that any dangerous goods accident, dangerous goods incident or the finding of undeclared or misdeclared dangerous goods in cargo or passenger's baggage, wherever it occurs, is reported to the CAA.

(2) A non-United Kingdom operator shall ensure that any dangerous goods accident, dangerous goods incident or the finding of undeclared or misdeclared dangerous goods in cargo or passenger's baggage which occurred in the United Kingdom is reported to the CAA.

(3) A report required under paragraph (1) or (2) shall contain such of the following information as is appropriate to the occurrence:

(a) date of the occurrence;

(b) location of the occurrence, flight number and flight date;

(c) description of the goods and the reference number of the air waybill, pouch, baggage tag and ticket;

(d) proper shipping name (including the technical name, if applicable);

(e) UN/ID number;

(f) class or division in accordance with the Technical Instructions and any subsidiary risk(s);

(g) type of packaging and the packaging specification marking;

(h) quantity of dangerous goods;

(i) name and address of the shipper or passenger;

(j) suspected cause of the occurrence;

(k) action taken;

(l) any other reporting action taken;

(m) name, title, address and contact number of the reporter;

(n) any other relevant details.

(4) (a) Subject to sub-paragraph (b) a report containing as much of the information referred to above as is in his possession shall be despatched in writing, or in such other form as the CAA may approve, and by the quickest available means to the CAA within 72 hours of the occurrence coming to the knowledge of the person making the report.

(b) If at that time any of the said information is not in the possession of that person, he shall despatch the information to the CAA in writing, or in such other form as the CAA may approve, and by the quickest available means within 72 hours of the information coming into his possession.

(5) Nothing in this regulation shall require a person to report any occurrence which he has reported under article 117 of the Air Navigation Order 2000 or which he has reason to believe has been or will be reported by another person to the CAA in accordance with that article.

Dropping articles for agricultural, horticultural, forestry or pollution control purposes

20 Subject to the provisions of regulation 4(1)(a) nothing in these Regulations shall apply to any aircraft flying solely for the purpose of dropping articles for the purpose of agriculture, horticulture, forestry or pollution control.

Police aircraft

21 Nothing in these Regulations other than regulation 4(1)(a) shall apply to the carriage of dangerous goods by an aircraft flying under and in accordance with the terms of a police air operator's certificate.

Signed by authority of the Secretary of State for Transport

John Spellar
Minister of State,
Department for Transport

11th November 2002

SCHEDULE

REGULATIONS REVOKED – REGULATION 2

	References
The Air Navigation (Dangerous Goods) Regulations 1994	S.I. 1994/3187
The Air Navigation (Dangerous Goods) (Amendment) Regulations 1996	S.I. 1996/3100
The Air Navigation (Dangerous Goods) (Second Amendment) Regulations 1997	S.I. 1997/2666
The Air Navigation (Dangerous Goods) (Third Amendment) Regulations 1998	S.I. 1998/2536
The Air Navigation (Dangerous Goods) (Fourth Amendment) Regulations 2001	S.I. 2001/918